Lighting Your Life Since 1970

Product Specifications - 12053WTOI

Job Name:	Job Type:
Quantity:	Comments

12053WTOI
Nexus 4-Light Pendant

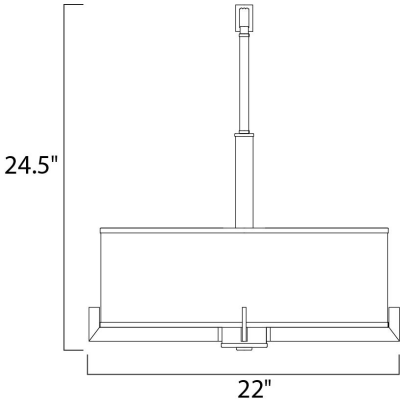

Finish
Oil Rubbed Bronze

Glass/Shade
White

Product Category
Entry Foyer Pendant

Lamping

Number of Bulbs	4
Light Type	Incandescent
Bulb Type	MB
Max Bulb Wattage	100
Max Fixture Wattage	400
Rated Life	±2,500 Hours
Rated Lumens	±4,600
Color Temp	2700K
Bulb(s)	Not Included
Light Up/Down	N/A
Beam Spread	N/A
CRI	N/A
Photo Cell Included	N/A
Ballast/Driver/Transformer	No
Dimmable	Standard

Measurements

Width	22.00"
Height	24.50"
Length	N/A
Extension	N/A
Back Plate Width	N/A
Back Plate Height	N/A
HCO	N/A
Min Overall Height	0.00"
Max Overall Height	N/A
Hanging Weight	14.95 lbs
Height Adjustable	N/A
Slope	N/A
Chain Length	36"
Wire Length	180"
Canopy Width	N/A
Canopy Height	N/A
Canopy Length	N/A

Shipping

Carton Weight	22.99 lbs
Carton Width	23"
Carton Height	14"
Carton Length	23"
Carton Cubic Feet	4.36
Master Pack	1
Master Pack Weight	N/A
Master Pack Width	N/A
Master Pack Height	N/A
Master Pack Length	N/A
Master Cubic Feet	N/A
UPS Shippable	Yes

Certification

Safety Rating	Dry
Energy Star	No
CA Title 24	No
CA Title 20	No
ADA	No
Dark Sky	N/A

Other

UPC Code	783209075054
Shades Included	N/A
Crystals Included	N/A
Diffuser Included	N/A
Conversion Kit	N/A
Material	N/A

Equivalents

Incandescent Watts	N/A
Fluorescent Watts	N/A

Maxim Lighting International and all designs, logos and images © 2016 Maxim Lighting International. All Rights Reserved. Maxim Lighting International reserves the right, at any time, to make changes in the design and/or construction of the product including the discontinuation of product without prior notice. Color may vary from what is pictured above due to limitations inherent to photographic processes.

Always consult a qualified, licensed electrician before installation of any product weighing 35 pounds or more. We recommend that a qualified, licensed electrician do the installation. Always install to a mechanically sound structure.

253 North Vineland Avenue | City of Industry, California 91746 | 800.486.2946p 800.486.7337f | www.maximlighting.com