MAXIM LIGHTING®
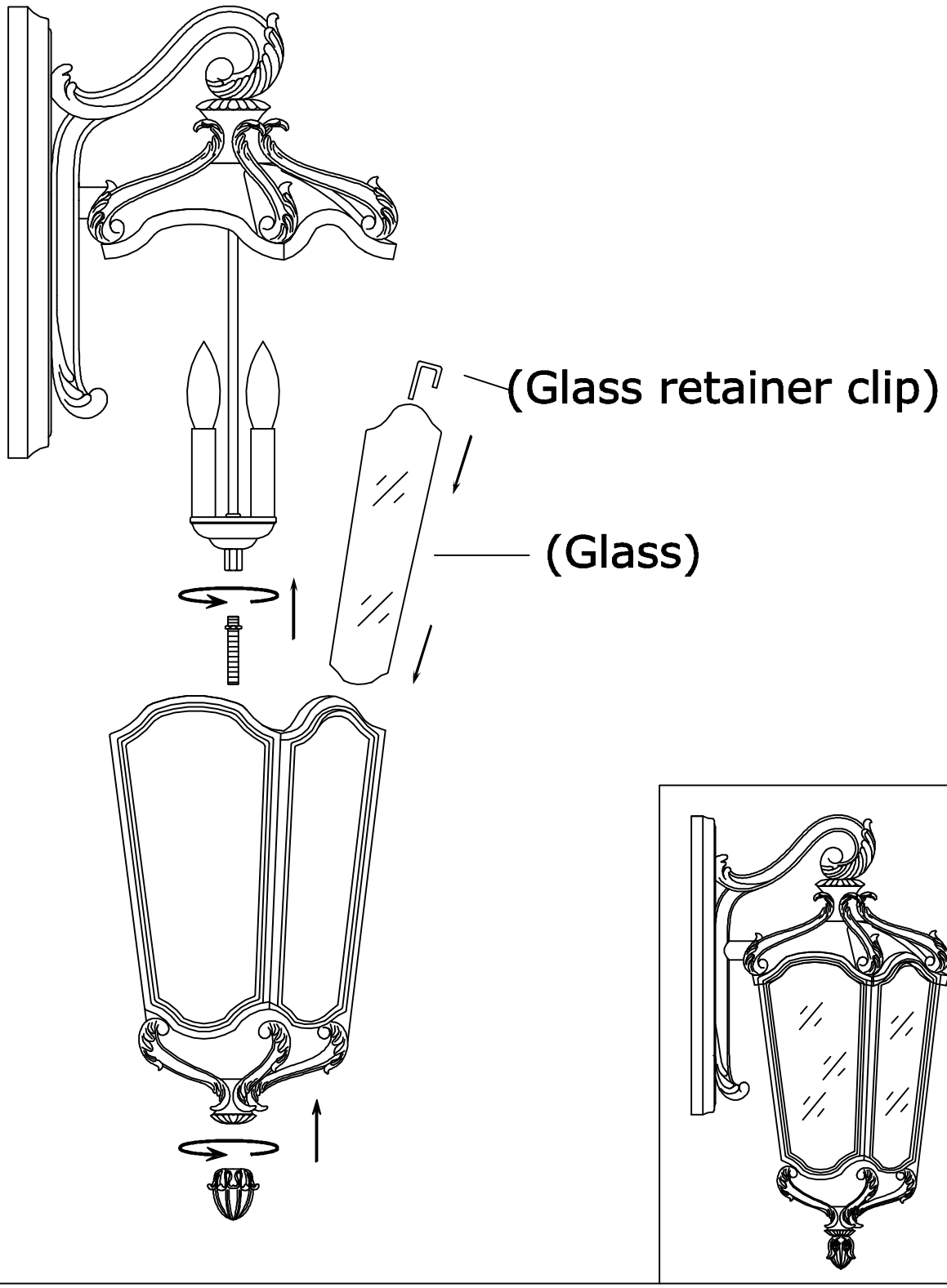
Assembly Instruction
Replace Glass
40224