MAXIM LIGHTING
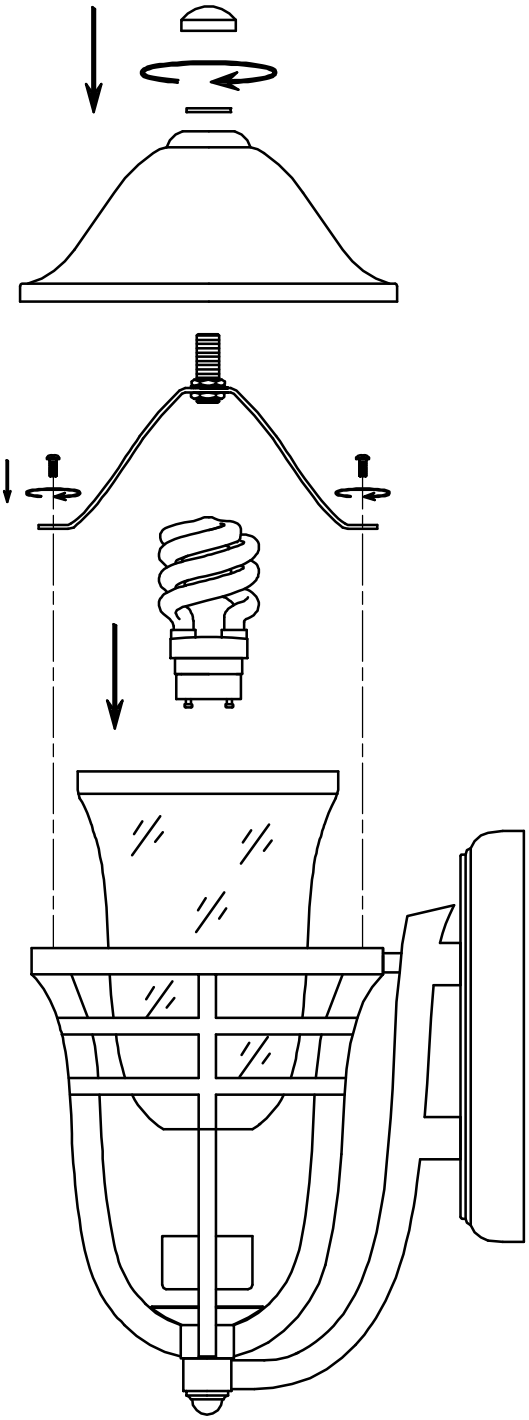
Assembly Instruction For Replace Glass 85403