Asiana | 10992WSRC

Job Name:_____ Job Type:_____ Quantity:_____ Comments:_____

PRODUCT DESCRIPTION

Influenced by Far Eastern design, this series features square tube metal work finished in Roasted Chestnut. The soft square Wilshire glass blends well with the roving curves of the body design.

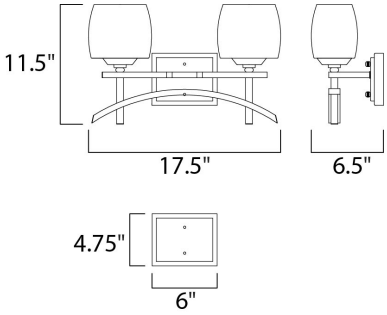

MEASUREMENTS

DIMENSION	: 17.5" W x 11.5" H x 6.5" Ext
BACK PLATE	: 6" W x 4.75" H x 6.75" HCO
HANGING WEIGHT	: 5.84 lb

LAMPING

INPUT VOLTAGE	: 120V
BULB	: 2 x 60W Incandescent E26 Medium , 120W Total
BULB INCLUDED	: (Not Included)
DIMMABLE	: Yes

FINISHES OPTION

Roasted Chestnut (RC)

GLASS

Wilshire WS

MATERIAL

Steel

RATINGS

cETLus
Damp Location

ADDITIONAL

INSTALL UP/DOWN: Up/Down
OPERATING TEMPERATURE:
-20°C (-4°F), 40°C (104°F)

Always consult a qualified electrician before installing any lighting product.

MAXIM LIGHTING

WESTERN DISTRIBUTION CENTER (HEADQUARTER)
253 NORTH VINELAND AVE I CITY OF INDUSTRY, CA 91746

EASTERN DISTRIBUTION CENTER
101 GARDNER PARK | PEACHTREE CITY, GA 30269

P. 626.956.4200 I F. 626.956.4225 I maximlighting.com