Luminous | 21145SCRE

Job Name:_____ Job Type:_____ Quantity:_____ Comments:_____

PRODUCT DESCRIPTION

Simple straight line frame fashioned in minimalist style finished in our Rustic Ebony are electrified by the warmth and beauty of the Stone Candle shades. These shades are carved out of solid stone each has a personality of its own.

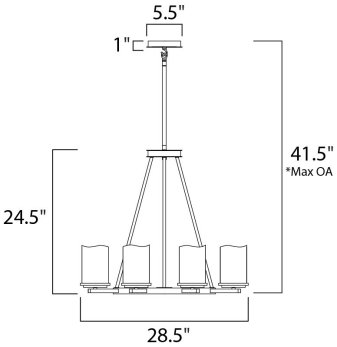

*max overall height

MEASUREMENTS

DIMENSION	: 28.5" L x 28.5" W x 24.5" H
MAX OAH	: 41.5" OAH
CANOPY	: 5.5" W x 1" H x 5.5" L
HANGING WEIGHT	: 37.74 lb

LAMPING

INPUT VOLTAGE	: 120V
BULB	: 8 x 60W Incandescent E26 Medium , 480W Total
BULB INCLUDED	: (Not Included)
DIMMABLE	: Yes

FINISHES OPTION

Rustic Ebony (RE)

GLASS

Stone Candle SC

MATERIAL

Steel, Natural Stone

RATINGS

cULus
Dry Location

ADDITIONAL

ADJUSTABLE
SLOPE: 120
OPERATING TEMPERATURE:
-20°C (-4°F), 40°C (104°F)

Always consult a qualified electrician before installing any lighting product.

MAXIM® LIGHTING

WESTERN DISTRIBUTION CENTER (HEADQUARTER)
253 NORTH VINELAND AVE I CITY OF INDUSTRY, CA 91746

EASTERN DISTRIBUTION CENTER
101 GARDNER PARK | PEACHTREE CITY, GA 30269

P. 626.956.4200 I F. 626.956.4225 I maximlighting.com