Westport VX | 40104MCAT

Job Name:_____ Job Type:_____ Quantity:_____ Comments:_____

PRODUCT DESCRIPTION

Maxim Lighting's Westport VX Collection is made with Vivex, a material twice the strength of resin, is non-corrosive, UV resistant and backed with a 5-Year Limited Warranty. Westport VX features our Artesian Bronze finish and Mocha Cloud glass.

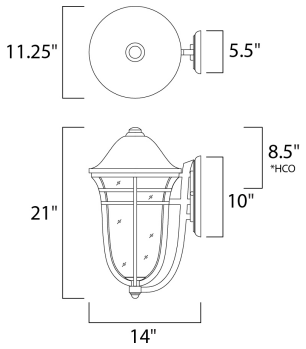

*height from center of outlet to the top of the fixture

MEASUREMENTS

DIMENSION	: 11.25" W x 21" H x 14" Ext
BACK PLATE	: 5.5" W x 10" H x 8.5" HCO
HANGING WEIGHT	: 8.16 lb

LAMPING

INPUT VOLTAGE	: 120V
BULB	: 1 x 60W Incandescent E26 Medium , 60W Total
BULB INCLUDED	: (Not Included)
DIMMABLE	: Yes

FINISHES OPTION

Artesian Bronze (AT)

GLASS

Mocha Cloud MC

MATERIAL

Vivex Resin Composite

RATINGS

cETLus
Wet Location

ADDITIONAL

OPERATING TEMPERATURE:
-20°C (-4°F), 40°C (104°F)

Always consult a qualified electrician before installing any lighting product.

MAXIM® LIGHTING

WESTERN DISTRIBUTION CENTER (HEADQUARTER)
253 NORTH VINELAND AVE I CITY OF INDUSTRY, CA 91746

EASTERN DISTRIBUTION CENTER
101 GARDNER PARK | PEACHTREE CITY, GA 30269

P. 626.956.4200 I F. 626.956.4225 I maximlighting.com