Bungalow LED E26 | 65652CDWSBZ

Job Name:_____ Job Type:_____ Quantity:_____ Comments:_____

PRODUCT DESCRIPTION

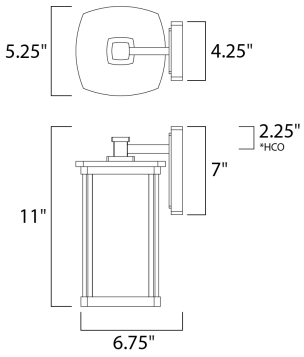

*height from center of outlet to the top of the fixture

MEASUREMENTS

DIMENSION	: 5.25" W x 11" H x 6.75" Ext
BACK PLATE	: 4.25" W x 7" H x 2.25" HCO
HANGING WEIGHT	: 3.6 lb

LAMPING

INPUT VOLTAGE	: 120V
LUMENS	: 800 Rated
BULB	: 1 x 9W LED E26 Medium , 9W Total
BULB INCLUDED	: (Included)
DIMMABLE	: Triac CL
CRI	: 90+ CRI
COLOR_TEMP	: 3000K

FINISHES OPTION

Bronze (BZ)

GLASS

Seedy and Wilshire CDWS

MATERIAL

Die Cast Aluminum, Glass

RATINGS

cETLus
Wet Location

ADDITIONAL

INCANDESCENT WATTS:
RATED LIFE 25000 Hours
OPERATING TEMPERATURE:
-20°C (-4°F), 40°C (104°F)

Always consult a qualified electrician before installing any lighting product.

MAXIM LIGHTING

WESTERN DISTRIBUTION CENTER (HEADQUARTER)
253 NORTH VINELAND AVE I CITY OF INDUSTRY, CA 91746

EASTERN DISTRIBUTION CENTER
101 GARDNER PARK | PEACHTREE CITY, GA 30269

P. 626.956.4200 I F. 626.956.4225 I maximlighting.com