

MAXIM® LIGHTING | FANS





MAXIM®
LIGHTING

At Maxim, ceiling fans do more than just move air—they redefine your space with style, functionality, and innovation. Thoughtfully crafted to balance form and performance, our fans deliver powerful efficiency while enhancing your decor. From classic, conventional designs to cutting-edge Fandelights that combine stunning light fixtures with discreet, high-performance fans, Maxim offers options for every taste, need, and budget. With approachable pricing, we ensure our fans are as accessible as they are stylish. Our advanced control systems, featuring magnetic remotes, Wifi capabilities, and easy-install solutions, set us apart from the rest. With premium materials like solid wood blades, rattan accents, and trend-forward finishes, every detail is designed to elevate your space while keeping you comfortable year-round. Maxim Lighting fans are more than functional—they're a stylish and innovative choice that leaves a lasting impression.

TABLE OF CONTENTS

VISUAL INDEX	**5**
WOODWIND	**7**
WOODWIND HUGGER	**9**
VORTEX-INDOOR	**11**
VORTEX-OUTDOOR	**13**
KEANU	**15**
DAISY	**17**
FALCON	**19**
HELM	**21**
CONDOR	**23**
TANKER	**25**
TANKER HUGGER	**27**
BOLA	**29**
SEABORNE	**31**
CUPOLA	**33**
SERENE	**35**
ULTRA SLIM	**37**
ODEON	**39**
SOLITAIRE	**41**
BODEGA BAY	**43**
SOLSTICE	**45**
CORONA	**47**
JEWEL	**49**
DARLING	**51**
AMBIENCE	**53**
WEAVE	**55**
TULUM	**57**
PORTCULLIS	**59**
TRIO	**61**
QUATTRO	**63**
LOWELL	**65**
SUPER-MAX	**67**
BASIC MAX-INDOOR	**69**
BASIC MAX-OUTDOOR	**71**
LIGHT KITS	**72**
FINISHES	**73**
DOWNRODS	**74**
FAN TIPS	**75**
CONTROLS	**76**
RESOURCES	**78**
WARRANTY	**79**

VISUAL INDEX



WOODWIND
PAGE: 07



WOODWIND HUGGER
PAGE: 09



VORTEX-INDOOR
PAGE: 11



VORTEX-OUTDOOR
PAGE: 13



KEANU
PAGE: 15



DAISY
PAGE: 17



FALCON
PAGE: 19

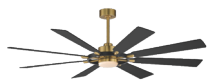

HELM
PAGE: 21



CONDOR
PAGE: 23



TANKER
PAGE: 25



TANKER HUGGER
PAGE: 27



BOLA.
PAGE: 29



SEABORNE
PAGE: 31



CUPOLA
PAGE: 33



SERENE
PAGE: 35



ULTRA SLIM
PAGE: 37



ODEON
PAGE: 39



SOLITAIRE
PAGE: 41



BODEGA BAY
PAGE: 43



SOLSTICE
PAGE: 45



CORONA
PAGE: 47



JEWEL
PAGE: 49



DARLING
PAGE: 51



AMBIENCE
PAGE: 53



WEAVE
PAGE: 55



TULUM
PAGE: 57



PORTCULLIS
PAGE: 59



TRIO
PAGE: 61



QUATTRO
PAGE: 63



LOWELL
PAGE: 65



SUPER-MAX
PAGE: 67



BASIC MAX-INDOOR
PAGE: 69



BASIC MAX-OUTDOOR
PAGE: 71



ACCESSORIES
PAGE: 72-77

52"|72"|80"

WOODWIND



WOODWIND | 88831 | 88833 | 88834

Solid Wood blades curve as they rotate around a center housing with LED light kit included. An additional cover plate is included if the light kit is not used. Select from stylish finish combinations including Natural Aged Brass with White Wood, Satin Nickel with Greywood, Black with Walnut wood, or Charcoal Bronze with Distressed Wood.

Indoor | DC Motor Option | CCT Select | Solid Wood Blades



88831BK
52" Fan



88834WTBKGWD
80" Fan



88833NAB
72" Fan



88834CHL
80" Fan

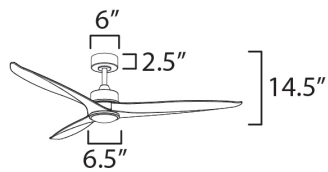

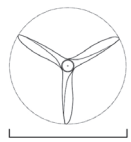



FCT8883WT
(Included)

	LAMPING	DIMENSIONS	ENERGY INFO AT HIGH SPEED		DOWNRODS
88831	18W PCB LED **COLOR TEMP:** 27-30-40K, **CRI:** 90+ **LUMENS:** lm 1000 DELIVERED	52" D x 14.5" H **BLADE**: 3 x 25.5"	**AIRFLOW:** **AIRFLOW EFFICIENCY:** **ELECTRICITY USE:**	5039 CFM 172 CFM / W 11W	12" FRD10012 18" FRD10018 24" FRD10024 36" FRD10036* 48" FRD10048* 60" FRD10060* 72" FRD10072*
88833	18W PCB LED **COLOR TEMP:** 27-30-40K, **CRI:** 90+ **LUMENS:** lm 975 DELIVERED	72" D x 14.5" H **BLADE**: 3 x 35.5"	**AIRFLOW:** **AIRFLOW EFFICIENCY:** **ELECTRICITY USE:**	7199 CFM 239 CFM / W 23W	*Only available in Powder Coat finishes
88834	18W PCB LED **COLOR TEMP:** 27-30-40K, **CRI:** 90+ **LUMENS:** lm 975 DELIVERED	80" D x 14.5" H **BLADE**: 3 x 39.5"	**AIRFLOW:** **AIRFLOW EFFICIENCY:** **ELECTRICITY USE:**	6993 CFM 304 CFM / W 18W	

Includes:
6" Downrods

FINISH & MATERIAL

- **SATIN NICKEL** (SN)
- **BLACK** (BK)
- SATIN NICKEL / WEATHERED WHTE (SNWWT)
- WHITE / NATURAL AGED BRASS / WEATHERED WHITE (WTNABWWT)
- **NATURAL AGED BRASS** (NAB)
- **CHARCOAL BRONZE** (CHL)
- WHITE / BLACK GREYWOOD (WTBKGWD)

BLADES

MATERIAL: SOLID WOOD
88831 PITCH: 11°
88833 PITCH: 13.4°
88834 PITCH: 13.4°


LIGHT KIT COVER PLATE (INCLUDED)


SATIN NICKEL W/ GREYWOOD BLADES

52"|72"|80"

WOODWIND HUGGER



WOODWIND HUGGER | 88830

Solid Wood blades curve as they rotate around a center housing with LED light kit included. An additional cover plate is included if the light kit is not used. Select from stylish finish combinations including Natural Aged Brass with White Wood, Satin Nickel with Greywood, Black with Walnut wood, or Charcoal Bronze with Distressed Wood.

Indoor | DC Motor | CCT Select | Solid Wood Blades



88830WTCHL
52” Fan



88830WTNABWWT
52” Fan



88830WTBKGWD
52” Fan



88830WTSN
52” Fan



88830WTBK
52” Fan

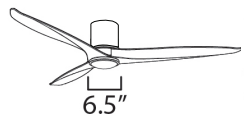

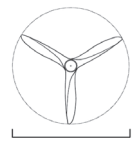



FCT8883WT
(Included)

88830

LAMPING	DIMENSIONS	ENERGY INFO AT HIGH SPEED
18W LED Integrated **COLOR TEMP:** 27-30-40K, **CRI:** 80+ **LUMENS:** lm 850 DELIVERED	52” D x 10.5” H **BLADE**: 3 x 25.5”	**AIRFLOW:** 5039 CFM **AIRFLOW EFFICIENCY** 172 CFM / W **ELECTRICITY USE:** 11W

FINISH & MATERIAL

- WHITE /CHARCOAL BRONZE (WTCHL)
- SATIN NICKEL / WEATHERED WHTE (SNWWT)
- WHITE / NATURAL AGED BRASS / WEATHERED WHITE (WTNABWWT)
- **WHITE / SATIN NICKEL** (WTSN)
- **WHITE / BLACK** (WTBK)
- WHITE / BLACK GREYWOOD (WTBKGWD)

BLADES

MATERIAL: ABS
PITCH: 12°



SATIN NICKEL W/ GREYWOOD BLADES



SATIN NICKEL W/ GREYWOOD BLADES

52"|60"

VORTEX-INDOOR



VORTEX – INDOOR | 88836 | 88837 | 88839

Sharp angular blades come together at the center housing of this fan for a modern, yet transitional look. Available in finishes to match most interior spaces, select from Matte Black, Satin Nickel with Greywood blades, Natural Aged Brass with White Blades or from the Wet Rated models in Matte Black and Charcoal with Driftwood Blades. The fan's DC motor is operated by a remote that comes with a magnetic wall mount and can control the color temperature of the light kit.

Indoor | DC Motor | CCT Select | ABS Blades



52" Fan



88837WTNAB
52" Fan



88839WTDSN
60" Fan

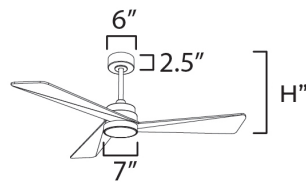

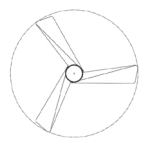

D"



FCT8883WT
(Included)

	LAMPING	DIMENSIONS	ENERGY INFO AT HIGH SPEED		DOWNRODS
88836	NO LIGHT KIT	52" D x 12.25" H **BLADE**: 3 x 27.75"	**AIRFLOW:** **AIRFLOW EFFICIENCY** **ELECTRICITY USE:**	4543 CFM 219 CFM / W 15W	12" FRD10012 18" FRD10018 24" FRD10024 36" FRD10036* 48" FRD10048* 60" FRD10060* 72" FRD10072* *Only available in Powder Coat finishes
88837	18W LED Integrated **COLOR TEMP:** 27-30-40K, **CRI:** 90+ **LUMENS:** lm 975 DELIVERED	52" D x 13.75" H **BLADE**: 3 x 27.75"	**AIRFLOW:** **AIRFLOW EFFICIENCY** **ELECTRICITY USE:**	4543 CFM 219 CFM / W 15W	
88839	18W LED Integrated **COLOR TEMP:** 27-30-40K, **CRI:** 90+ **LUMENS:** lm 975 DELIVERED	60" D x 13.75" H **BLADE**: 3 x 31.75"	**AIRFLOW:** **AIRFLOW EFFICIENCY** **ELECTRICITY USE:**	5184 CFM 244 CFM / W 17W	

Includes:
6" Downrods

FINISH & MATERIAL

- **DARK SATIN NICKEL** (DSN)
- **NATURAL AGED BRASS** (NAB)
- **WHITE / DARK SATIN NICKEL** (WTDSN)
- **WHITE / NATURAL AGED BRASS** (WTNAB)

BLADES

MATERIAL: ABS
PITCH: 12°



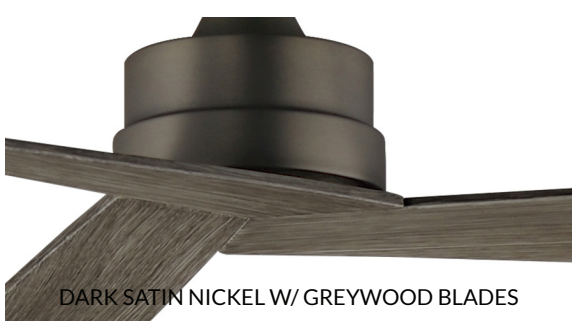

DARK SATIN NICKEL W/ GREYWOOD BLADES



NATURAL AGED BRASS W/ WHITE WOOD BLADES

52"|60"

VORTEX-OUTDOOR

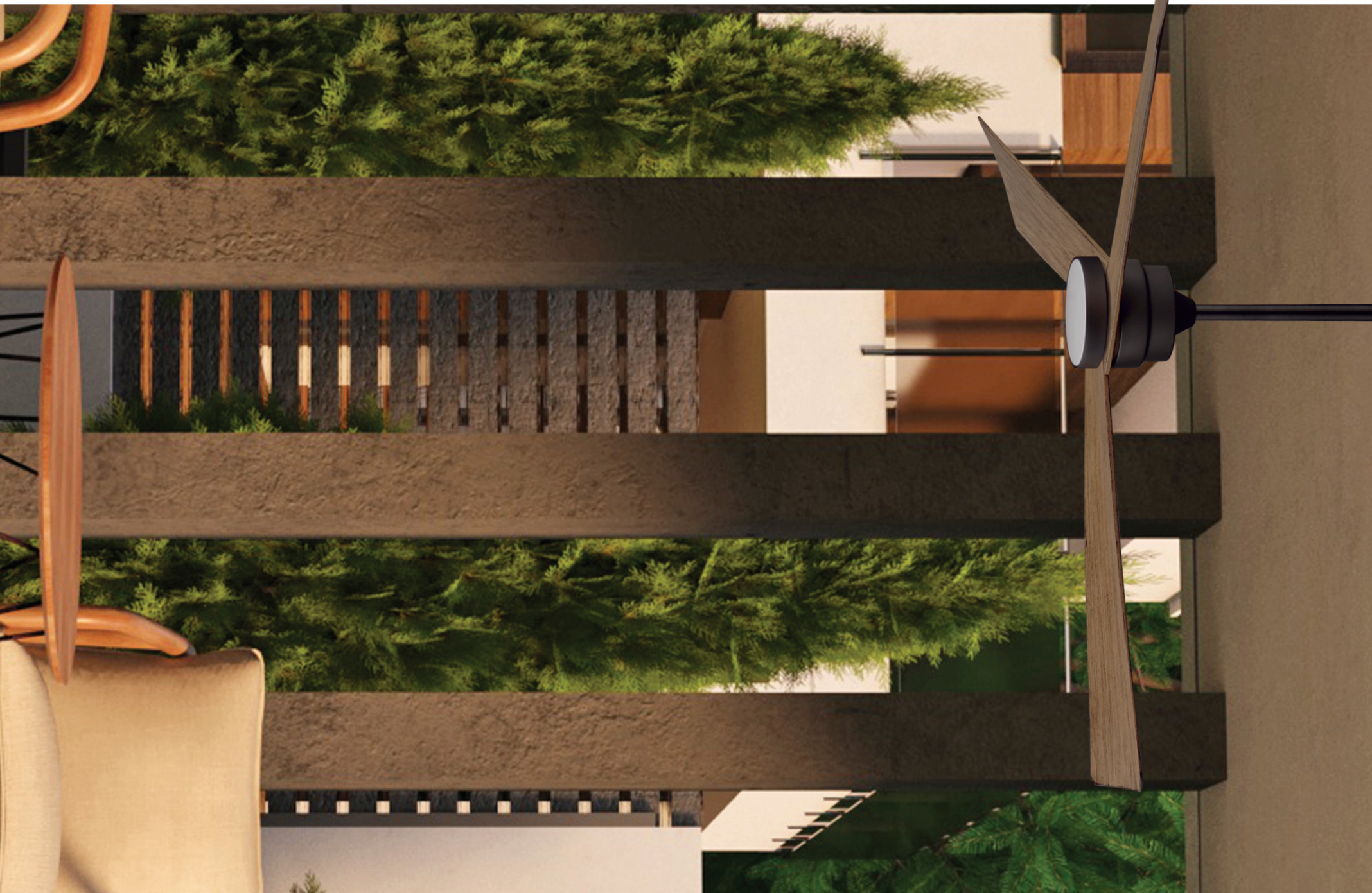

VORTEX – OUTDOOR | 88846 | 88847 | 88849

Sharp angular blades come together at the center housing of this fan for a modern, yet transitional look. Available in outdoor rated powder coat finishes, select from Matte Black or Charcoal with Driftwood Blades. The fan's DC motor is operated by a remote that comes with a magnetic wall mount and can control the color temperature of the light kit.

Indoor/Outdoor | DC Motor | CCT Select | Wet Rated | ABS Blades



88846CHL
52" Fan



88847WTBK
52" Fan



88849WTCHL
60" Fan

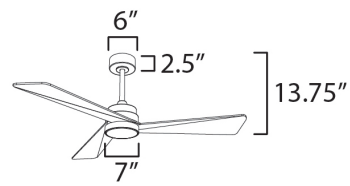

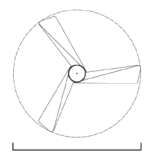

D"



FCT8883WT
(Included)

	LAMPING	DIMENSIONS	ENERGY INFO AT HIGH SPEED	DOWNRODS
88846	NO LIGHT KIT	52" D x 12.25" H **BLADE**: 3 x 27.75"	**AIRFLOW:** 4543 CFM **AIRFLOW EFFICIENCY** 219 CFM / W **ELECTRICITY USE:** 15W	12" FRD10012 18" FRD10018 24" FRD10024 36" FRD10036 48" FRD10048 60" FRD10060* 72" FRD10072* *Only available in Powder Coat finishes
88847	18W PCB LED Integrated **COLOR TEMP:** 27-30-40K, **CRI:** 80+ **LUMENS:** lm 810 DELIVERED	52" D x 13.75" H **BLADE**: 3 x 27.75"	**AIRFLOW:** 4543 CFM **AIRFLOW EFFICIENCY** 219 CFM / W **ELECTRICITY USE:** 15W	
88849	18W LED Integrated **COLOR TEMP:** 27-30-40K, **CRI:** 80+ **LUMENS:** lm 810 DELIVERED	60" D x 13.75" H **BLADE**: 3 x 31.75"	**AIRFLOW:** 5184 CFM **AIRFLOW EFFICIENCY** 219 CFM / W **ELECTRICITY USE:** 15W	

Includes:
6" Downrods

FINISH AND MATERIAL

- **WHITE / BLACK** (WTBK)
- **BLACK** (BK)
- **WHITE / CHARCOAL** (WTDSN)
- **CHARCOAL** (CHL)

BLADES

MATERIAL: ABS
PITCH: 12°



CHARCOAL W/ DRIFTWOOD BLADES



BLACK W/ BLACK BLADES



56" KEANU

KEANU | 88753 | 88754 | 88755

Inspired by the effortless rhythm of a gentle breeze, the Keanu fan brings both form and function to indoor and outdoor spaces. Its graceful curve appears like carved wood but it is made of ABS blades designed for durability in Wet Location applications. The energy-efficient DC motor ensures quiet, powerful performance. Offering versatility for any setting, the Keanu is available as a close-to-ceiling hugger or with down rod options, with or without an integrated, CCT-tunable light kit. The LED is adjustable from a warm 2700K to bright 5000K. Choose from Matte White, Matte Black, or Satin Nickel finishes, with Teak wood blade options for Matte White and Walnut wood blades for Matte Black. Complete with a DC wall control, the Keanu delivers a refreshing blend of modern design and year-round comfort.

Indoor/Outdoor | DC Motor | Wet Rated | CCT Select Option | ABS Blades



88753BKWN
(No Light Kit)



88754
(No Light Kit)



88755WTBKWN



88755WTMWTK

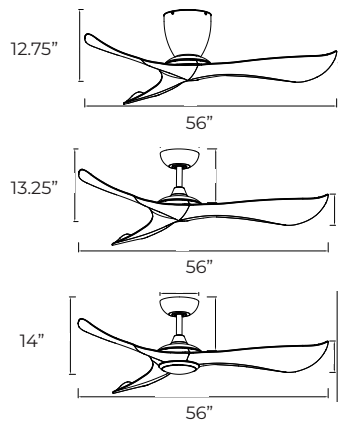



FCT887WT
(Included)

	LAMPING	DIMENSIONS	ENERGY INFO AT HIGH SPEED	DOWNRODS
88753	NO LIGHT KIT	56" D x 12.75" H **BLADE**: 3 x 27.75"	**AIRFLOW:** 6284 CFM **AIRFLOW EFFICIENCY** 219 CFM / W **ELECTRICITY USE:** 15W	12" FRD10012 18" FRD10018 24" FRD10024 36" FRD10036 48" FRD10048 60" FRD10060* 72" FRD10072* *Only available in Powder Coat finishes
88754	NO LIGHT KIT	56" D x 13.25" H **BLADE**: 3 x 27.75"	**AIRFLOW:** 5468 CFM **AIRFLOW EFFICIENCY** 161 CFM / W **ELECTRICITY USE:** 25W	
88755	18W PCB LED Integrated **COLOR TEMP:** 30-40-50K, **CRI:** 80+ **LUMENS:** lm 1150 DELIVERED	56" D x 14" H **BLADE**: 3 x 31.75"	**AIRFLOW:** 5468 CFM **AIRFLOW EFFICIENCY** 161 CFM / W **ELECTRICITY USE:** 25W	

FINISH & MATERIAL

- **BLACK** (BK)
- **MATTE WHITE** (MW)
- **BLACK/WALNUT** (BKWN)
- **MATTE WHITE/TEAK** (MWTK)

BLADES

MATERIAL: ABS
PITCH: 36°

Includes:
6" Downrods



BLACK W/ WALNUT BLADES



BLACK W/ BLACK BLADES

60"

DAISY



DAISY | 88826

For larger spaces, a larger blade sweep is sometimes required. This minimalist design is pure and simple. Elongated plywood blades span 60 inches and finished in Matte White contrasting the motor housing's Natural Aged Brass finish. The two tone finish makes for a stylish and bright fan great for interior spaces. Wall control with dual slide dimmer and fan speed control is provided.

Indoor | AC Motor | Plywood Blades | Reversible Blades

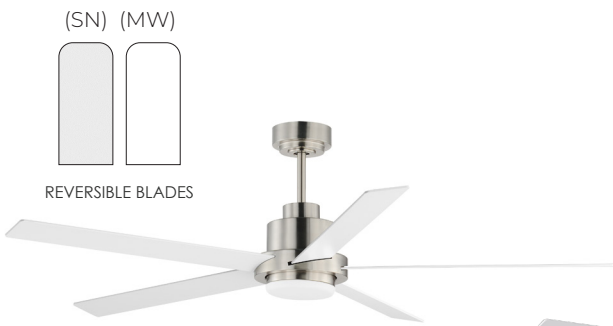

88826SN



88826NAB
Light Kit Cover Plate (Included)



88826BKGLD

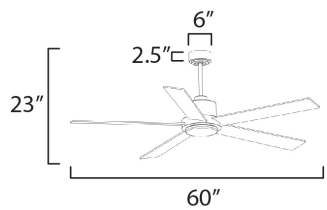



FCT8881WT
(Included)

88826

LAMPING	DIMENSIONS	ENERGY INFO AT HIGH SPEED		DOWNRODS
12W LED Integrated **COLOR TEMP:** 3000K, **CRI:** 90+ **LUMENS:** lm 950 DELIVERED	60" D x 23" H **BLADE**: 5 x 26.75"	**AIRFLOW:** **AIRFLOW EFFICIENCY** **ELECTRICITY USE:**	5542 CFM 88 CFM / W 41W	12" (FRD12) 18" (FRD18) 24" (FRD24) 36" (FRD36) 48" (FRD48) 60" (FRD60) 72" (FRD72)

Includes:
6" Downrods

FINISH & MATERIAL

- **WHITE / NATURAL AGED BRASS** (WTNAB)
- **BLACK / GOLD** (BKGLD)
- **SATIN NICKEL** (SN)

BLADES

MATERIAL: PLYWOOD
PITCH: 12°

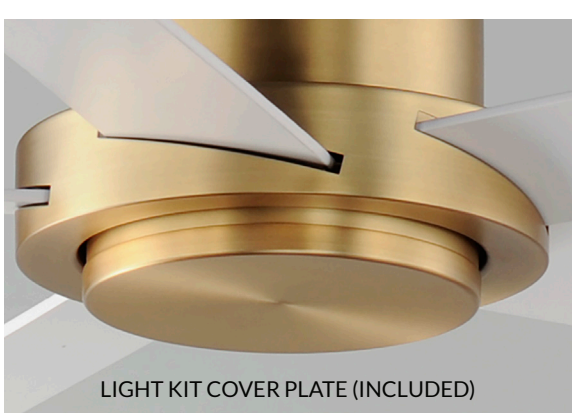
LIGHT KIT COVER PLATE (INCLUDED)


BLACK AND GOLD W/ BLACK BLADES

52"

FALCON



FALCON | 88707 | 88708 | 88717

The Falcon ceiling fan combines sleek, modern style with versatility. Damp-rated for indoor or covered outdoor use, it features a 3CCT LED light with adjustable color temperatures and an optional cover plate. The included wall control allows separate adjustments for fan speed and light brightness (3-wire installation required). Optional extension rods are available for customized height. Stylish and functional, the Falcon is perfect for any space.

Indoor/Outdoor | AC or DC Motor | Wet or Damp Rated | ABS Blades | Pull Chain Option



88708MW



88707SN
(Pull Chain Options)



88717BK



88717BKWN

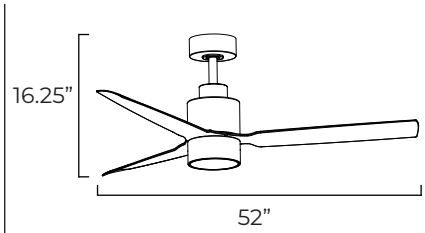



FCT8881WT (Included w/ 88708)



FCT887WT (Included w/ 88717)

	LAMPING	DIMENSIONS	ENERGY INFO AT HIGH SPEED	DOWNRODS
88707	18W PCB LED **COLOR TEMP:** 3000K, **CRI:** 90+ **LUMENS:** lm 945 DELIVERED	52” D x 16.25” H **BLADE**: 3 x 24.8”	**AIRFLOW:** 5100 CFM **AIRFLOW EFFICIENCY** 119 CFM / W **ELECTRICITY USE:** 28W	12” FRD10012 18” FRD10018 24” FRD10024 36” FRD10036* 48” FRD10048* 60” FRD10060* 72” FRD10072* *Only available in Powder Coat finishes
88708	18W PCB LED **COLOR TEMP:** 3000K, **CRI:** 90+ **LUMENS:** lm 945 DELIVERED	52” D x 16.25” H **BLADE**: 3 x 24.8”	**AIRFLOW:** 5100 CFM **AIRFLOW EFFICIENCY** 119 CFM / W **ELECTRICITY USE:** 28W	
88717	18W PCB LED **COLOR TEMP:** 27-30-40K, **CRI:** 90+ **LUMENS:** lm 945 DELIVERED	52” D x 16.25” H **BLADE**: 3 x 24.8”	**AIRFLOW:** 5268 CFM **AIRFLOW EFFICIENCY** 161 CFM / W **ELECTRICITY USE:** 25W	

Includes:
6” Downrods

FINISH & MATERIAL

- **BLACK** (BK)
- **BLACK / WALNUT** (WNBK)
- **SATIN NICKEL** (SN)
- **MATTE WHITE** (MW)

BLADES

MATERIAL: ABS
PITCH: 18°



BLACK W/ WALNUT BLADES



SATIN NICKEL W/ PULL CHAIN



72" HELM

HELM | 88878

Inspired by the steering wheel of a nautical ship, the Helm fan boasts an impressive 72” blade span and stylish two-tone finishes. Its plywood blades offer dual-sided contrasting finishes, allowing for customizable design. Choose from a Black frame with Natural Aged Brass accents paired with Black and White blades, or a Satin Nickel frame with White and Blackened Walnut blades. The energy-efficient DC motor is operated by a convenient remote control, which magnetically attaches to a standard wall plate. The integrated LED light kit features tunable color temperature, adjustable from warm 2700K to bright 4000K, offering versatile lighting options for any space.

Indoor | DC Motor | CCT Select | Plywood Blades | Reversible Blades

(BK) (MW)



REVERSIBLE BLADES



88878BKNAB

(SV) (WN)



REVERSIBLE BLADES



88878WTSN

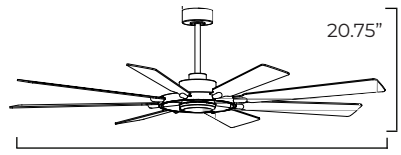

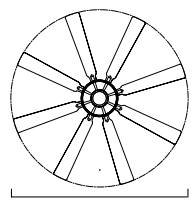



FCT8883WT
(Included)

88878

LAMPING	DIMENSIONS	ENERGY INFO AT HIGH SPEED		DOWNRODS
24W PCB LED, 120V **COLOR TEMP:** 27-30-40K, **CRI:** 90+ **LUMENS:** lm 1180 DELIVERED	72” D x 20.75” H **BLADE**: 8 x 28.25”	**AIRFLOW:** **AIRFLOW EFFICIENCY** **ELECTRICITY USE:**	8343 CFM 255 CFM / W 26W	6” (FRD10006) 12” (FRD10012) 18” (FRD10018) 24” (FRD10024) 36” (FRD10036) 48” (FRD10048) 60” (FRD10060) 72” (FRD10072)

FINISH & MATERIAL

- **BLACK / NATURAL AGED BRASS** (BKNAB)
- **WHITE / SATIN NICKEL** (WTSN)

BLADES

MATERIAL: PLYWOOD
PITCH: 13°

Includes:
8” Downrods



BLACK & NATURAL AGED BRASS W/ WHITE BLADES



SATIN NICKEL W/ BLACKENED WALNUT BLADES

65″ | 84″

CONDOR



CONDOR | 88766 | 88767 | 88768

Expansive blade spans of 65" ABS blades or 80" aluminum blades, the Condor soars as an outdoor rated fan. Clean design with a DC motor and strong airflow performance. Available in Matte Black, Matte White, or Brushed Aluminum. No light kit included. Paired with a DC wall control that does not get interrupted by various frequencies and uses novel 3-wire installations to provide reliable functionality.

Indoor/Outdoor | DC Motor | 65" ABS Blades/80" Aluminum Blades | Wet Rated



88768BK
84" Fan



88766MW
65" Fan



88767WTBK
65" Fan

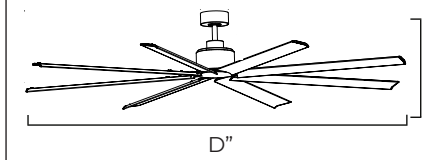



FCT887WT
(Included)

	LAMPING	DIMENSIONS	ENERGY INFO AT HIGH SPEED		DOWNRODS
88766	NO LIGHT KIT	65" D x 13.5" H **BLADE**: 8 x 29.65"	**AIRFLOW:** **AIRFLOW EFFICIENCY** **ELECTRICITY USE:**	8792 CFM 194 CFM / W 33W	6" (FRD10006) 12" (FRD10012) 18" (FRD10018) 24" (FRD10024) 36" (FRD10036) 48" (FRD10048) 60" (FRD10060) 72" (FRD10072)
88767	24W LED Integrated, 120V **COLOR TEMP:** 30-40-50K, **CRI:** 90+ **LUMENS:** lm 800 DELIVERED	65" D x 14.5" H **BLADE**: 8 x 29.65"	**AIRFLOW:** **AIRFLOW EFFICIENCY** **ELECTRICITY USE:**	8792 CFM 194 CFM / W 33W	
88768	NO LIGHT KIT	84" D x 14" H **BLADE**: 8 x 37.6"	**AIRFLOW:** **AIRFLOW EFFICIENCY** **ELECTRICITY USE:**	11,225 CFM 307 CFM / W 30.3W	

FINISH & MATERIAL

- **BLACK** (BK)
- **WHITE / BLACK** (WTBK)
- **SATIN NICKEL** (SN)
- **MATTE WHITE** (MW)
- **ALUMINUM** (AL)

BLADES:

MATERIAL: ABS OR ALUMINUM
PITCH: 18°

Includes:
6" Downrods







52" TANKER

TANKER | 88805 | 88806 | 88816

Clean and contemporary, the Tanker ceiling fan is damp rated so whether it is a covered outdoor living space or any room indoor this sleek fan suits the application. Additional extensions rods may be purchased to acquire the desired length. Available with and without light kit.

Indoor/Outdoor | AC or DC Motor | Damp Rated | ABS Blades



AC 88806BK



DC

88816SN



AC 88805BK
(No Light Kit)

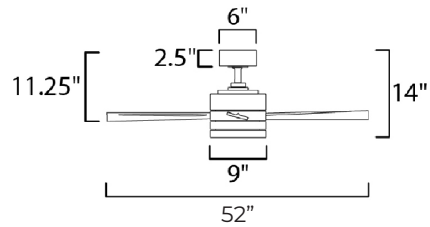



FCT88805WT
(Included w/ 88805)



FCT88801WT
(Included w/ 88806)



FCT88816WT
(Included w/ 88816)



FCT8881WT
*Sold Separately for 88806

	LAMPING	DIMENSIONS	ENERGY INFO AT HIGH SPEED		DOWNRODS
88805	NO LIGHT KIT	52" D x 14.5" H **BLADE**: 3 x 23.11"	**AIRFLOW:** **AIRFLOW EFFICIENCY** **ELECTRICITY USE:**	3405 CFM 90 CFM / W 29W	6" (FRD06) 12" (FRD12) 18" (FRD18) 24" (FRD24) 36" (FRD36) 48" (FRD48) 60" (FRD60) 72" (FRD72)
88806	24W LED **COLOR TEMP:** 3000K, **CRI:** 90+ **LUMENS:** lm 1680 DELIVERED	52" D x 14.5" H **BLADE**: 3 x 23.11"	**AIRFLOW:** **AIRFLOW EFFICIENCY** **ELECTRICITY USE:**	3405 CFM 89 CFM / W 29W	
88816	24W LED **COLOR TEMP:** 3000K, **CRI:** 90+ **LUMENS:** lm 1680 DELIVERED	52" D x 14.5" H **BLADE**: 3 x 23.11"	**AIRFLOW:** **AIRFLOW EFFICIENCY** **ELECTRICITY USE:**	3853 CFM 301 CFM / W 9W	

Includes:
4" Downrods

FINISH & MATERIAL

BLACK (BK
SATIN NICKEL (SN)

BLADES

MATERIAL: ABS
PITCH: 11°

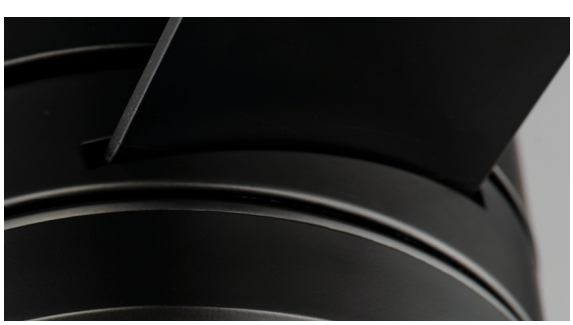



52"

TANKER HUGGER



TANKER HUGGER | 88803

Clean and contemporary, the Tanker ceiling fan is damp rated so whether it is a covered outdoor living space or any room indoor this sleek fan suits the application. Ditch the fan rod and convert to a hugger. Available in 3 different finishes: Satin Nickel, Matte Black, Matte White.

Indoor/Outdoor | AC Motor | ABS Blades



88803BK



88803SN



88803MW

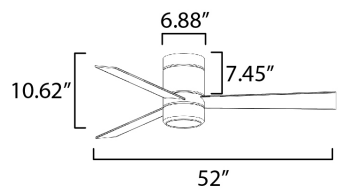

FCT8881WT
(Included w/ 88803)

88803

LAMPING	DIMENSIONS	ENERGY INFO AT HIGH SPEED	
12W LED INTEGRATED **COLOR TEMP:** 3000K, **CRI:** 90+ **LUMENS:** lm 840 DELIVERED	52" D x 10" H **BLADE**: 3 x 24"	**AIRFLOW:** **AIRFLOW EFFICIENCY** **ELECTRICITY USE:**	4578 CFM 94 CFM / W 37W

FINISH & MATERIAL

- **MATTE WHITE** (MW)
- **BLACK** (BK)
- **SATIN NICKEL** (SN)

BLADES

MATERIAL: ABS
PITCH: 12°

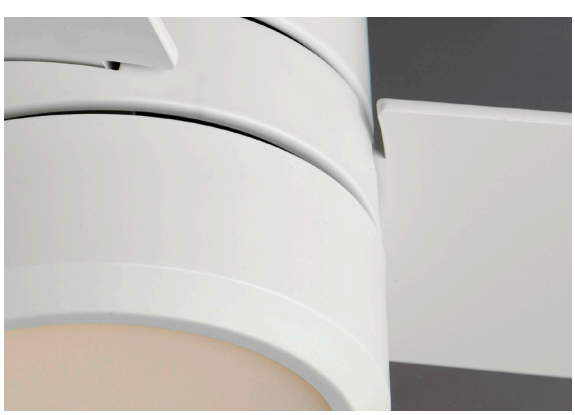



52"

BOLA



BOLA | 88811

Modern and chic, the Bola collection elevates the standard fan with its beautifully balanced design. A sleek globe frame seamlessly separates the top DC motor housing from the lower LED light kit, while gracefully curved solid wood blades add a touch of natural sophistication. The energy-efficient DC motor ensures quiet operation, while the included remote control allows you to customize the CCT-tunable LED light, from warm to bright, for the perfect ambiance. Available in 52" blade span and finishes in Matte White, Matte Black, Satin Nickel with white wood blades, or Natural Aged Brass with white wood blades. Suitable for dry locations, Bola merges form and function with effortless charm.

Indoor | DC Motor | ABS Blades



88811WNBK



88811NAB



88811BK



88811WT



88811SN

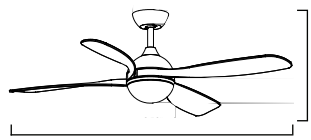

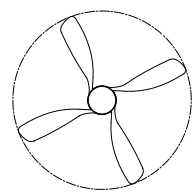



FCT8883WT
(Included)

88811

LAMPING	DIMENSIONS	ENERGY INFO AT HIGH SPEED		DOWNRODS
24W PCB LED, 120V **COLOR TEMP:** 27-30-40K, **CRI:** 90+ **LUMENS:** lm 1270 DELIVERED	52" D x 16.25" H **BLADE**: 4 x 28.25"	**AIRFLOW:** **AIRFLOW EFFICIENCY** **ELECTRICITY USE:**	4953 CFM 261 CFM / W 14W	12" (FRD10012) 18" (FRD10018) 24" (FRD10024) 36" (FRD10036) 48" (FRD10048) 60" (FRD10060) 72" (FRD10072)

FINISH & MATERIAL

- **BLACK** (BK)
- **WHITE** (WT)
- **SATIN NICKEL** (SN)
- **NATURAL AGED BRASS** (NAB)
- **MATTE BLACK/ WALNUT** (WNBK)

BLADES

MATERIAL: ABS
PITCH: 12°

Includes:
6" Downrods



BLACK W/ BLACK BLADES



NATURAL AGED BRASS W/ WHITE BLADES

52" SEABORNE



SEABORNE | 88723

Seaborne is engineered to thrive where others can't. This marine-grade fan is crafted entirely from non-corrosive materials, including an ABS body, blades, and canopy, to resist salt air, moisture, and harsh climates. A fully integrated wet-location light kit adds functional illumination without sacrificing durability. Clean, modern lines make Seaborne the ideal solution for coastal
patios, covered decks, and open-air living spaces where endurance meets elevated design.

Marine Grade | AC Motor | ABS Blades



88723BK



88723MW



88723SN

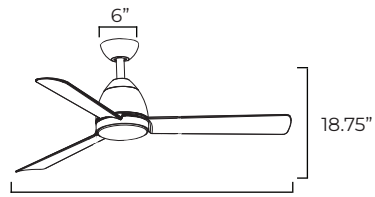

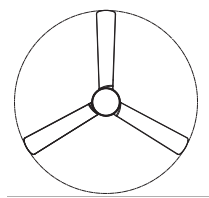

FCT8881WT
(Included w/ 88723)

88723

LAMPING	DIMENSIONS	ENERGY INFO AT HIGH SPEED		DOWNRODS
24W PCB LED, 120V **COLOR TEMP:** 3000K, **CRI:** 90+ **LUMENS:** lm 1230 DELIVERED	54" D x 18.75" H **BLADE**: 3 x 24.60"	**AIRFLOW:** **AIRFLOW EFFICIENCY** **ELECTRICITY USE:**	4953 CFM 261 CFM / W 20W	12" (FRD10012) 18" (FRD10018) 24" (FRD10024) 36" (FRD10036) 48" (FRD10048) 60" (FRD10060) 72" (FRD10072)

FINISH & MATERIAL

- **BLACK** (BK)
- **MATTE WHITE** (MW)
- **SATIN NICKEL** (SN)
- **MATTE BLACK/ WALNUT** (WNBK)

BLADES

MATERIAL: ABS
PITCH: 14°

Includes:
6" Downrods



SATIN NICKEL W/ SATIN NICKEL BLADES



BLACK W/ WALNUT BLADES

52"

CUPOLA



CUPOLA | 88801 | 88802

The central housing is domical, from which a trio of uniquely curved fan blades smoothly rotate. The Cupola also features an LED integrated dome shape or a 2 lamp light kit with a domical glass to create a perfect sphere.

Indoor | AC Motor | ABS Blades



88801OI



88802BK

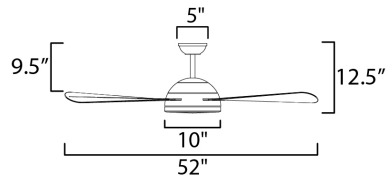



FCT88801WT
(Included)



FCT8881WT
(Included)

	LAMPING	DIMENSIONS	ENERGY INFO AT HIGH SPEED	DOWNRODS
88801	24W LED E26, 120V **COLOR TEMP:** 3000K, **CRI:** 90+ **LUMENS:** lm 1640 DELIVERED	52" D x 12.5" H **BLADE**: 3 x 23"	**AIRFLOW:** 3949 CFM **AIRFLOW EFFICIENCY** 73 CFM / W **ELECTRICITY USE:** 38W	12" (FRD12) 18" (FRD18) 24" (FRD24) 36" (FRD36) 48" (FRD48) 60" (FRD60) 72" (FRD72)
88802	24W LED E26, 120V **COLOR TEMP:** 3000K, **CRI:** 90+ **LUMENS:** lm 1200 DELIVERED	52" D x 12.5" H **BLADE**: 3 x 23"	**AIRFLOW:** 4124 CFM **AIRFLOW EFFICIENCY** 76 CFM / W **ELECTRICITY USE:** 39W	

Includes:
6" Downrods

FINISH & MATERIAL

- **BLACK / BLACK** (BK)
- **SATIN NICKEL / SILVER** (SN)
- **OIL RUBBED BRONZE / WALNUT** (OI)

BLADES

MATERIAL: ABS
PITCH: 26°



SATIN NICKEL W/ SILVER BLADES



BLACK W/ WALNUT BLADES



52" SERENE

SERENE | 88841

Curved elements are accentuated in this classic fan interpretation. Plywood blades offer reversible finish options that extend style choices. An additional cover plate is included if the light kit is not needed. Available in Matte Black with Black/Walnut fan blades, Satin Nickel with Silver/Distressed Wood blades, or Matte White with Matte White/White Oak blades.

Indoor | DC Motor | Plywood Blades | Reversible Blades

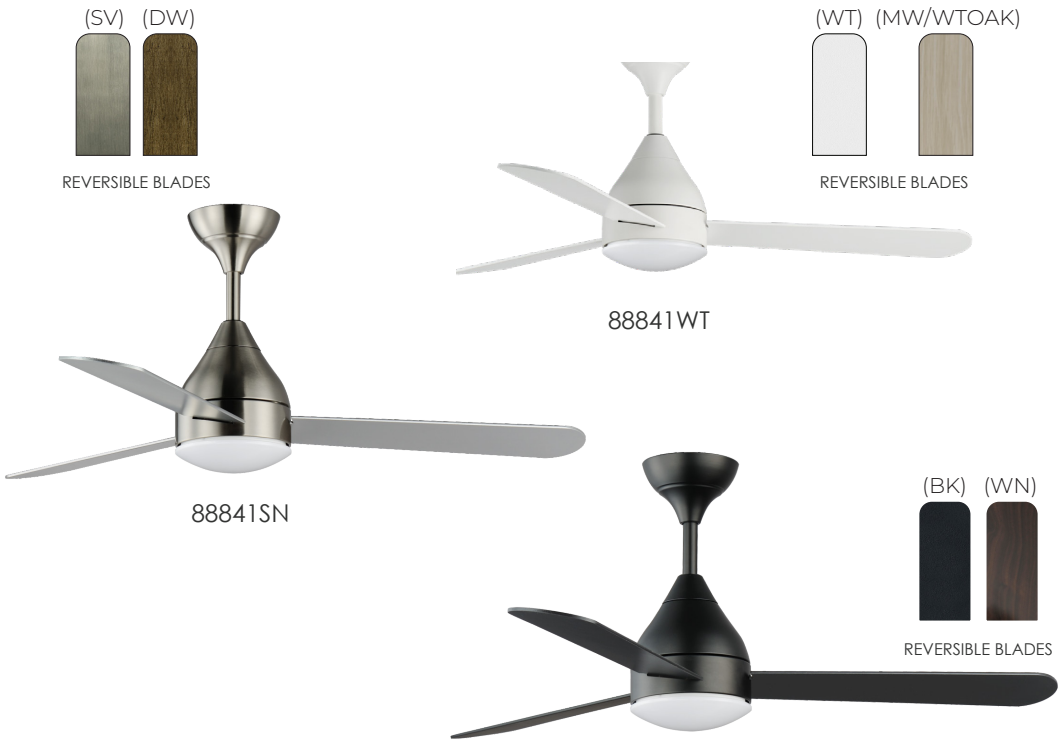

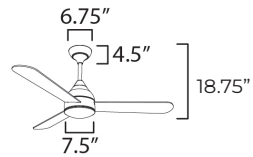

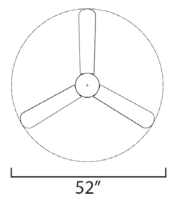



FCT8883WT
(Included)

88841

LAMPING	DIMENSIONS	ENERGY INFO AT HIGH SPEED	DOWNRODS
24W PCB LED **COLOR TEMP:** 3000K, **CRI:** 80+ **LUMENS:** lm 1741 DELIVERED	52” D x 18.75” H **BLADE**: 3 x 23.75”	**AIRFLOW:** 4453 CFM **AIRFLOW EFFICIENCY** 137 CFM / W **ELECTRICITY USE:** 24W	12” (FRD12) 18” (FRD18) 24” (FRD24) 36” (FRD36) 48” (FRD48) 60” (FRD60) 72” (FRD72)

FINISH & MATERIAL

- **WHITE / WHITE OAK** (WT)
- **BLACK / WALNUT** (BK)
- **SATIN NICKEL / GREYWOOD** (SN)

BLADES

MATERIAL: PLYWOOD
PITCH: 12°

Includes:
6” Downrods

DC DIM


LIGHT KIT COVER PLATE (INCLUDED)


SATIN NICKEL W/ DISTRESSED WOOD BLADES

52"

ULTRA SLIM



ULTRA SLIM | 88807

With its small profile housing and elegant blade shape, the Ultra Slim provides an upgrade to indoor/outdoor fan options. Available in 3 different finishes: White, Nickel, and Matte Black

Indoor/Outdoor | AC Motor | Damp Rated | ABS Blades



88807SN



88807MW



88807BK

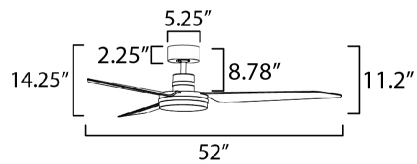



FCT88805WT
(Included)

88807

LAMPING	DIMENSIONS	ENERGY INFO AT HIGH SPEED		DOWNRODS
NO LIGHT KIT	52" D x 11" H **BLADE**: 3 x 23.75"	**AIRFLOW:** **AIRFLOW EFFICIENCY** **ELECTRICITY USE:**	3517 CFM 89 CFM / W 29W	12" (FRD12) 18" (FRD18) 24" (FRD24) 36" (FRD36) 48" (FRD48) 60" (FRD60) 72" (FRD72)

FINISH & MATERIAL

- **BLACK** (BK)
- **MATTE WHITE** (MW)
- **SATIN NICKEL** (SN)

BLADES

MATERIAL: ABS
PITCH: 10°

Includes:
4" Downrods







32.75"

ODEON



ODEON | 61018

Evoke glitz and glitter with the glamorous stylings of the Odeon collection. Beveled crystals meet a swooping lavish metal frame. Built in Wi-Fi allows you to control your fan speed from your favorite device.

Indoor | DC Motor | ABS Blades | Wifi-Enabled | Dimmable



61018GS

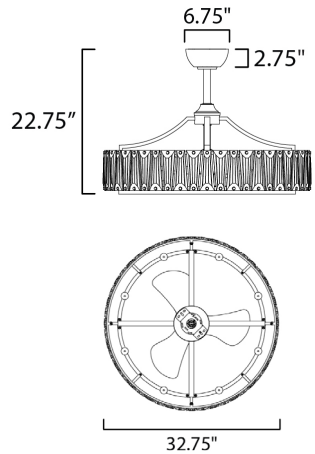



FCT6000WT
(Included)

61018

LAMPING	DIMENSIONS	ENERGY INFO AT HIGH SPEED		DOWNRODS
8 x 4W E12 LED CLEAR B11 **COLOR TEMP:** 3000K, **CRI:** 90+ **LUMENS:** lm 1800 DELIVERED	32.75" D x 22.75" H **BLADE**: 3 x 10.6"	**AIRFLOW:** **AIRFLOW EFFICIENCY** **ELECTRICITY USE:**	2414 CFM 80 CFM / W 19W	12" (FRD0112) 18" (FRD0118) 24" (FRD0124) 30" (FRD0130) 36" (FRD0136)

Includes:
8" Downrods

FINISH & MATERIAL	BLADES
BLACK (BK) **GOLDEN SILVER** (GS)	**MATERIAL:** ABS **PITCH:** 30°





30.75"

SOLITAIRE



SOLITAIRE | 61013

This romantic Chandelier with Fan delivers luxury appeal and timeless sophistication. The Solitaire features curved arms that lift a crown of six candle-style lamps. Built in Wi-Fi allows you to control your fan speed from your favorite device.

Indoor | DC Motor | ABS Blades | Wifi-Enabled | Dimmable



61013SM

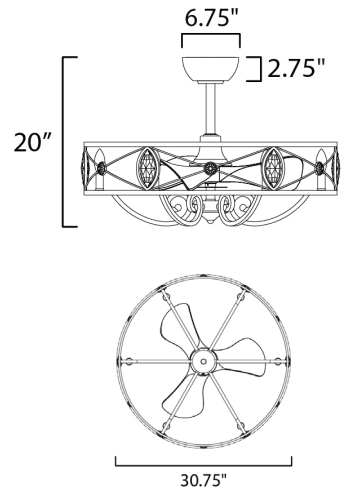



FCT6000WT
(Included)

61013

LAMPING	DIMENSIONS	ENERGY INFO AT HIGH SPEED	DOWNRODS
6 x 4W E12 LED CLEAR B11 **COLOR TEMP:** 3000K, **CRI:** 90+ **LUMENS:** lm 1800 DELIVERED	30.75" D x 20" H **BLADE**: 3 x 10.6"	**AIRFLOW:** 2401 CFM **AIRFLOW EFFICIENCY** 75 CFM / W **ELECTRICITY USE:** 21W	12" (FRD0112) 18" (FRD0118) 24" (FRD0124) 30" (FRD0130) 36" (FRD0136)

Includes:
8" Downrods

FINISH & MATERIAL	BLADES
SILVER MIST (SM)	**MATERIAL:** ABS **PITCH:** 30°





36"

BODEGA BAY



BODEGA BAY | 61004

Rings of Ash Wood are distressed and then finished In Antique Pecan for that old world feel. Built in Wi-Fi allows you to control your fan speed from your favorite device.

Indoor | DC Motor | ABS Blades | Wifi-Enabled | Dimmable



61004APAR

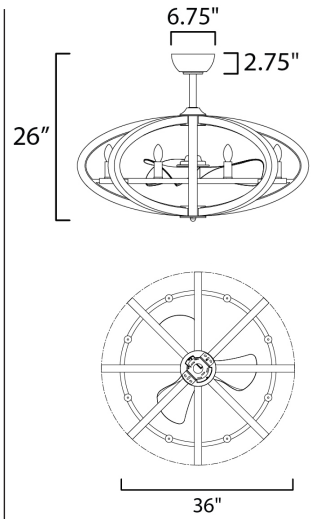



FCT6000WT
(Included)

61004

LAMPING	DIMENSIONS	ENERGY INFO AT HIGH SPEED		DOWNRODS
8 x 4W E12 LED FROSTED B11 **COLOR TEMP:** 3000K, **CRI:** 90+ **LUMENS:** lm 2380 DELIVERED	36" D x 26" H **BLADE**: 3 x 10.6"	**AIRFLOW:** **AIRFLOW EFFICIENCY** **ELECTRICITY USE:**	1953 CFM 62 CFM / W 20W	12" (FRD0112) 18" (FRD0118) 24" (FRD0124) 30" (FRD0130) 36" (FRD0136)

Includes:
8" Downrods

FINISH & MATERIAL

ANTIQUE PECAN / ANTHRACITE (APAR)

BLADES

MATERIAL: ABS
PITCH: 30°





33.5"

SOLSTICE



SOLSTICE | 61005 | 61006

The Solstice Chandelier with Fan houses three innovatively curved fan blades within a cage of artfully bent Satin Nickel channel to create a classic form in light. Built in Wi-Fi allows you to control your fan speed from your favorite device.

Indoor | DC Motor | ABS Blades | Wi-Fi Enabled | White Tunable | Dimmable



61005BK



61006SN

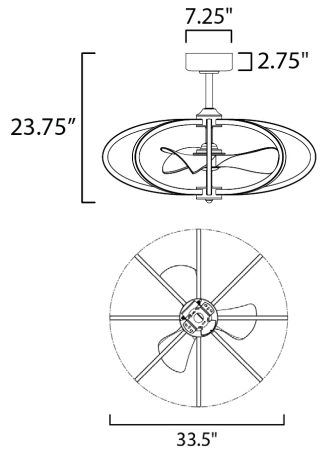



FCT6100WT
(Included)

	LAMPING	DIMENSIONS	ENERGY INFO AT HIGH SPEED	DOWNRODS
61005	60W LED Integrated, White Tunable **COLOR TEMP:** 2700-4000K, 90 CRI **LUMENS:** . 4320 lm DELIVERED	33.5" D x 23.75" H **BLADE**: 3 x 22"	**AIRFLOW:** 4242 CFM **AIRFLOW EFFICIENCY** 152 CFM / W **ELECTRICITY USE:** 29W	12" (FRD0112) 18" (FRD0118) 24" (FRD0124) 30" (FRD0130) 36" (FRD0136)
61006	60W LED Integrated, White Tunable **COLOR TEMP:** 2700-4000K, **CRI:** 90+ **LUMENS:** lm 4320 DELIVERED	35.5" D x 23.75" H **BLADE**: 3 x 10.6"	**AIRFLOW:** 2600 CFM **AIRFLOW EFFICIENCY** 130 CFM / W **ELECTRICITY USE:** 20W	

Includes:
8" Downrods

FINISH & MATERIAL

SATIN NICKEL (SN)
BLACK (BK)

BLADES

MATERIAL: ABS
PITCH: 30°





27.5"

CORONA



CORONA | 61001 | 61002

Minimalistic frames finished in your choice of Oil Rubbed Bronze or Polished Chrome support cylinders of Frost glass shades. Built in Wi-Fi allows you to control your fan speed from your favorite device.

Indoor | DC Motor | ABS Blades | Wi-Fi Enabled | White Tunable | Dimmable



61001BK



61002SN

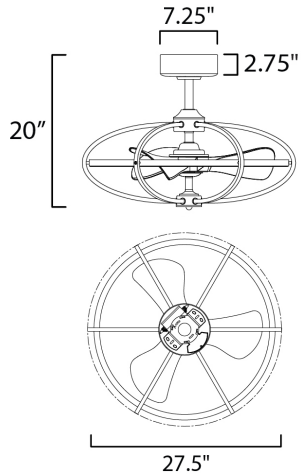



FCT6100WT
(Included)

	LAMPING	DIMENSIONS	ENERGY INFO AT HIGH SPEED	DOWNRODS
61001	30W PCB LED **COLOR TEMP:** 2700-4000K, **CRI:** 80+ **LUMENS:** lm 2220 DELIVERED	27.5" D x 20" H **BLADE**: 3 x 21.75"	**AIRFLOW:** 4242 CFM **AIRFLOW EFFICIENCY** 152 CFM / W **ELECTRICITY USE:** 29W	12" (FRD0112) 18" (FRD0118) 24" (FRD0124) 30" (FRD0130) 36" (FRD0136)
61002	30W PCB LED, 120V **COLOR TEMP:** 2700-4000K, **CRI:** 80+ **LUMENS:** lm 2220 DELIVERED	27.5" D x 20" H **BLADE**: 3 x 10.6"	**AIRFLOW:** 2600 CFM **AIRFLOW EFFICIENCY** 130 CFM / W **ELECTRICITY USE:** 20W	

Includes:
6" Downrods

FINISH & MATERIAL

- **BLACK** (BK)
- **SATIN NICKEL** (SN)

BLADES

MATERIAL: ABS
PITCH: 21°

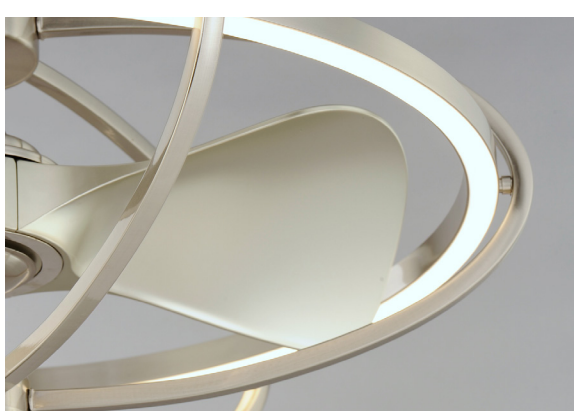





JEWEL

33"

JEWEL | 61019

An elegant fusion of function and fashion, this contemporary Fandelight features a bold Black band segmented by highly reflective plated Gold crystal settings. The settings support beveled crystal accents on jewel-inspired prongs a set distance from the fixture enhance its iridescence allowing natural and ambient light to glisten off its faceted surfaces. Encircled within is an internal ring in Black that houses an LED light source directing ample light downward.

Indoor | DC Motor | ABS Blades | Wi-Fi Enabled | White Tunable | Dimmable



61019BCBKGLD

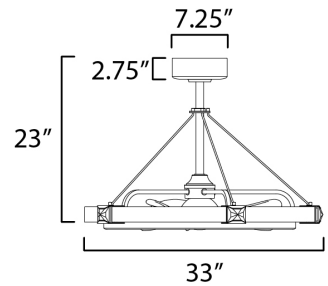



FCT6100WT
(Included)

61019

LAMPING	DIMENSIONS	ENERGY INFO AT HIGH SPEED		DOWNRODS
30W PCB LED **COLOR TEMP:** 2700-4000K, **CRI:** 90+ **LUMENS:** lm 2220 DELIVERED	33" D x 23" H **BLADES**: 3 x 10.6"	**AIRFLOW:** **AIRFLOW EFFICIENCY** **ELECTRICITY USE:**	2443 CFM 78 CFM / W 20W	12" (FRD0112) 18" (FRD0118) 24" (FRD0124) 30" (FRD0130) 36" (FRD0136)

FINISH & MATERIAL

BLACK / GOLD (BKGLD)

BLADES

MATERIAL: ABS
PITCH: 30°

Includes:
15" Downrods

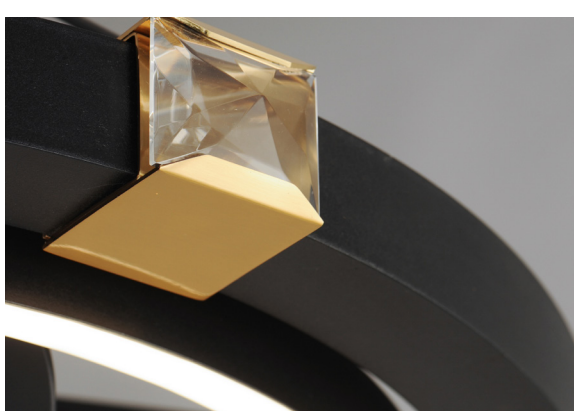



24"

DARLING

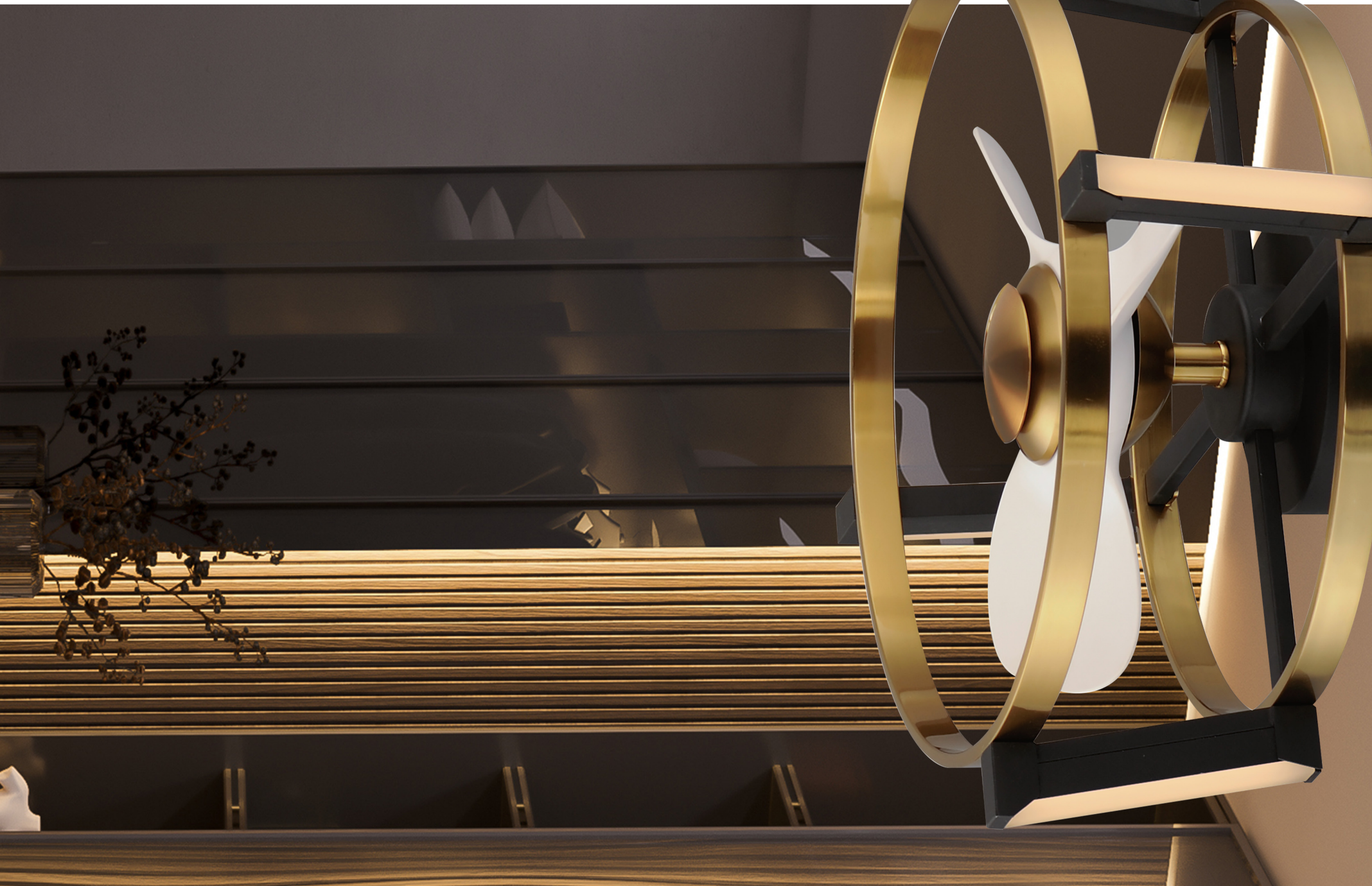

DARLING | 61022

For those with smaller spaces in need of a fan, this is the Darling Fandelight. Eliminating the downrods of a typical fandelight, this hugger Fandelight provides stylish trends with a low profile integrated fan. The combination finish of Natural Aged Brass, Matte Black, and the white fan blades make this a design that delivers trend, not just functionality. Fully dimmable and the features can be controlled by wall control provided or through its Wifi-enabled technology.

Indoor | DC Motor | ABS Blades | Wi-Fi Enabled | Dimmable



61022WTBKNAB

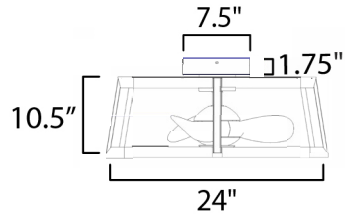



FCT6000WT
(Included)

61022

LAMPING	DIMENSIONS	ENERGY INFO AT HIGH SPEED
28W | 29 PCB INTEGRATED LED **COLOR TEMP:** 3000K, **CRI:** 80+ **LUMENS:** lm 2200 DELIVERED	24" D x 10.5" H **BLADES**: 3 x 7.3"	**AIRFLOW:** 1130 CFM **AIRFLOW EFFICIENCY** 50 CFM / W **ELECTRICITY USE:** 22.6W

FINISH & MATERIAL

BLACK / NATURAL AGED BRASS (WTBKNAB)

BLADES

MATERIAL: ABS
PITCH: 35°

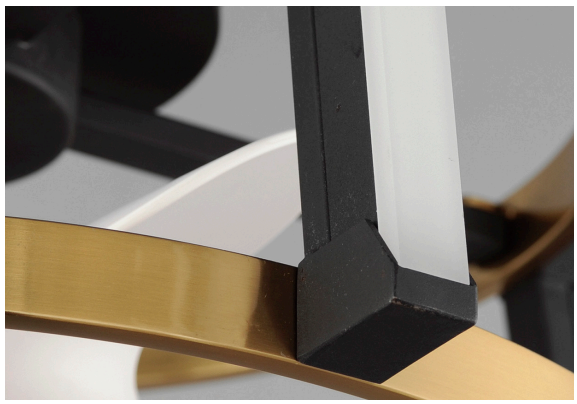



33.5"

AMBIENCE

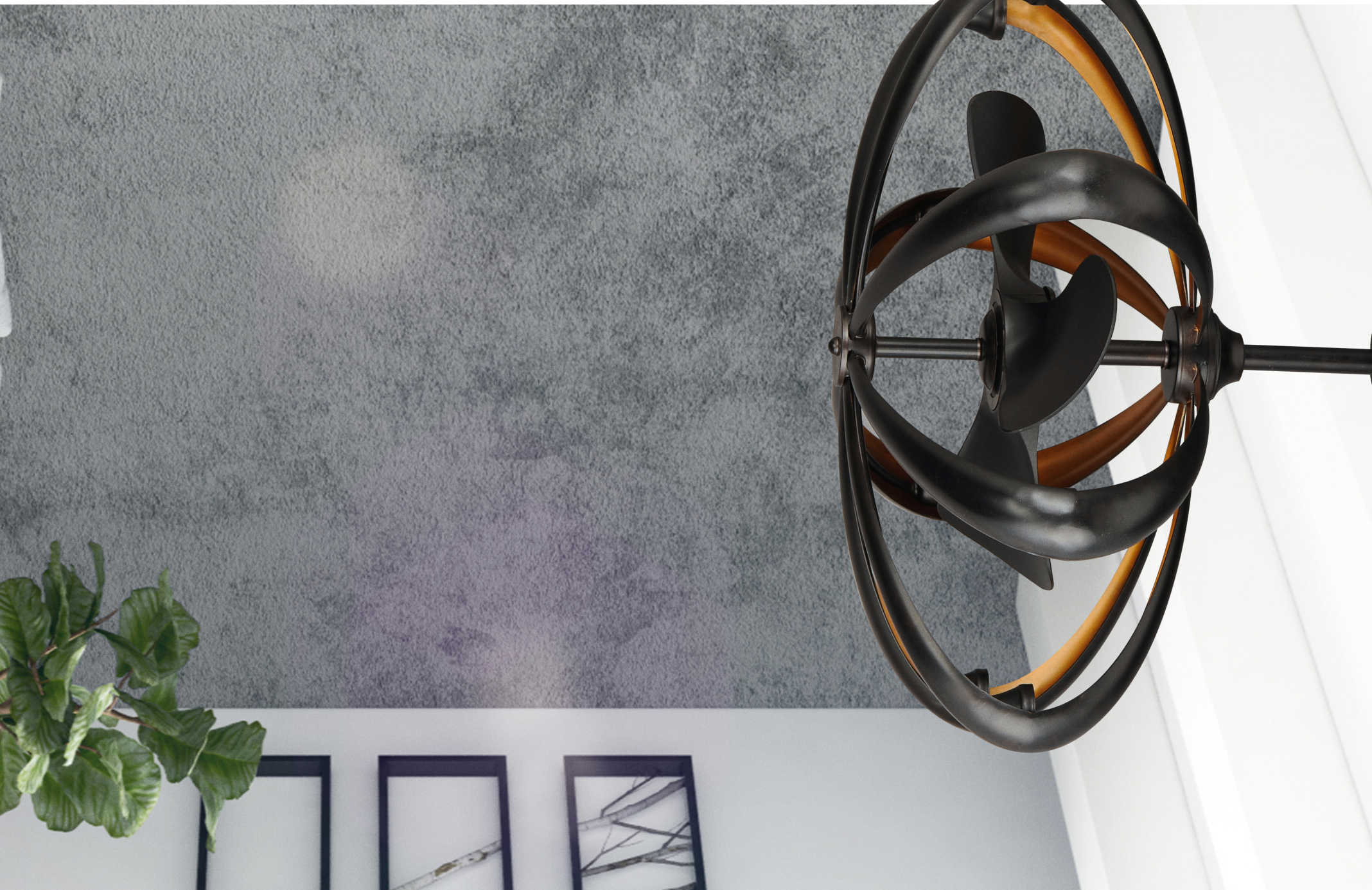

AMBIENCE | 61009

The Ambience collection will enhance your home with a perfect mix of form and function. Built in Wi-Fi allows you to control your fan speed from your favorite device.

Indoor | DC Motor | ABS Blades | Wi-Fi Enabled | Dimmable



61009BZGLD

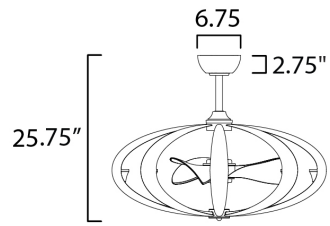

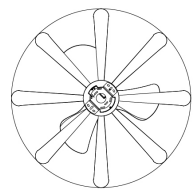



FCT6000WT
(Included)

61009

LAMPING	DIMENSIONS	ENERGY INFO AT HIGH SPEED		DOWNRODS
48W PCB LED **COLOR TEMP:** 3000K, **CRI:** 80+ **LUMENS:** lm 3600 DELIVERED	33.5" D x 25.75" H **BLADE**: 3 x 10.6"	**AIRFLOW:** **AIRFLOW EFFICIENCY** **ELECTRICITY USE:**	1131 CFM 130 CFM / W 20W	12" (FRD0112) 18" (FRD0118) 24" (FRD0124) 30" (FRD0130) 36" (FRD0136)

FINISH & MATERIAL

BRONZE / GOLD (BZGLD)

BLADES

MATERIAL: ABS
PITCH: 30°

Includes:
8" Downrods







33" WEAVE

WEAVE | 61010

Bands of metal are woven on a frame and finished in Bronzed Gilt on the outside and a contrasting Gold Leaf finish on the inside. Built in Wi-Fi allows you to control your fan speed from your favorite device.

Indoor | DC Motor | ABS Blades | Wi-Fi Enabled | White Tunable | Dimmable



61010BZGTGLD

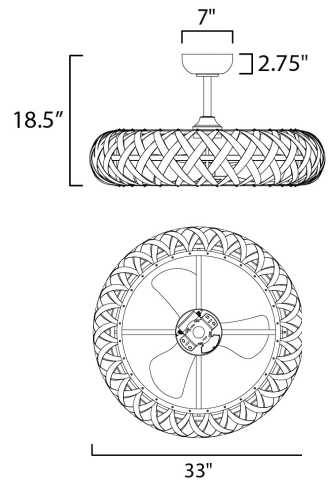



FCT6000WT
(Included)

61010

LAMPING	DIMENSIONS	ENERGY INFO AT HIGH SPEED		DOWNRODS
40W PCB LED **COLOR TEMP:** 3000K, **CRI:** 80+ **LUMENS:** lm 2700 DELIVERED	33"D x 18.5" H **BLADE**: 3 x 10.6"	**AIRFLOW:** **AIRFLOW EFFICIENCY** **ELECTRICITY USE:**	2455 CFM 122 CFM / W 22W	12" (FRD0112) 18" (FRD0118) 24" (FRD0124) 30" (FRD0130) 36" (FRD0136)

Includes:
8" Downrods

FINISH & MATERIAL

BRONZE GILT / GOLD (BZGTGLD)

BLADES

MATERIAL: ABS
PITCH: 30°





28"|36"

TULUM



TULUM | 61012 | 61014

Natural Rattan wicker forms a sloping drum shade with integrated fan and LED light source. The Dark Bronze finish of the metalwork encases an LED ring at the bottom directing light downward. Finished in outdoor coatings for the rattan and the metalwork, this Fandelight is designed for covered outdoor spaces. Add coastal flair and find some respite under the breeze flowing from the FanDelight by Maxim. Not suitable for harsh climates or coastal applications.

Indoor | DC Motor | Damp Rated | ABS Blades | White Tunable | Dimmable



61012RADBZ
28"



61014NADBZ
36"

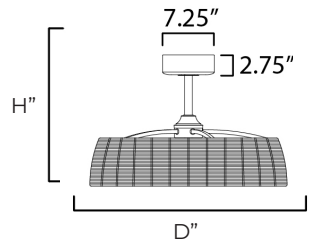



FCT6100WT
(Included)

	LAMPING	DIMENSIONS	ENERGY INFO AT HIGH SPEED		DOWNRODS
61012	30W PCB LED, 120V **COLOR TEMP:** 2700-4000K, **CRI:** 90+ **LUMENS:** lm 2220 DELIVERED	28" D x 18.5" H **BLADE**: 3 x 10.6"	**AIRFLOW:** **AIRFLOW EFFICIENCY** **ELECTRICITY USE:**	2512 CFM 72 CFM / W 18W	12" (FRD0112) 18" (FRD0118) 24" (FRD0124) 30" (FRD0130) 36" (FRD0136)
61014	35W PCB LED, 120V **COLOR TEMP:** 2700-4000K, **CRI:** 90+ **LUMENS:** lm 2500 DELIVERED	35.75" D x 19.75" H **BLADE**: 3 x 13.55"	**AIRFLOW:** **AIRFLOW EFFICIENCY** **ELECTRICITY USE:**	2639 CFM 97 CFM / W 19W	

FINISH & MATERIAL

- **NATURAL / DARK BRONZE** (NADBZ)
- **DARK RATTAN / DARK BRONZE** (RADBZ)

BLADES

MATERIAL: ABS
PITCH: 30° | 35°

Includes:
8" Downrods





32.75"

PORTCULLIS



PORTCULLIS | 61016

Not just a fan, the Portcullis FanDelight is framed within a woven metal grate pattern in a rich Bronze Gilt finish. The interior gold finish adds warmth to the candelabras that are shielded with a curved reflector backplate not to be disrupted by the circulating fan blades behind it. With a full range of fan control and Wifi-enabled, this fixture is not only attractive, but full of functional features.

Indoor | DC Motor | Damp Rated | ABS Blades | Wi-Fi Enabled | White Tunable | Dimmable



61016BZGT

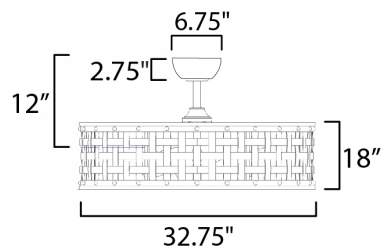



FCT6000WT
(Included)

61016

LAMPING	DIMENSIONS	ENERGY INFO AT HIGH SPEED		DOWNRODS
24W E12 FROSTED B11 **COLOR TEMP:** 3000K, **CRI:** 80+ **LUMENS:** lm 1400 DELIVERED	32.75" D x 18" H **BLADE**: 3 x 10.6"	**AIRFLOW:** **AIRFLOW EFFICIENCY** **ELECTRICITY USE:**	2208 CFM 73 CFM / W 20W	18" (FRD0118) 24" (FRD0124) 36" (FRD0136)

Includes:
6" Downrods

FINISH & MATERIAL	BLADES
BRONZE GILT / (BZGT)	**MATERIAL:** ABS **PITCH:** 30°









52"

TRIO

TRIO | 88783 | 88793| 89906 | 89909

A contemporary, yet transitional look at economical pricing, the Trio fan is finished in Satin Nickel with 3 straight fan blades in Black on one side and silver on the other side. The fan is powered by an included wall control or pull chain as well as LED JA8 compliant bulbs also included.

Indoor | AC Motor | Plywood Blades | Reversible Blades | Wall Control or Pull Chain Options

(MW) (WT/OAK)

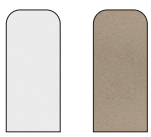

REVERSIBLE BLADES



88783MW



88793SN
(AC PULL CHAIN)

(SV) (DW)



REVERSIBLE BLADES

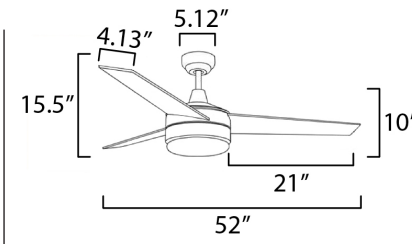

(BK) (WN)



REVERSIBLE BLADES



89906FTBKWN



89909FTSNBK
(WALL CONTROL INC.)

(SV) (BK)



REVERSIBLE BLADES



FCT88801WT
(Included w/ 89909)



FCT8881WT
*Sold Separately & (Included w/ 88783)

	LAMPING	DIMENSIONS	ENERGY INFO AT HIGH SPEED	DOWNRODS
88783	2 x 9W LED **COLOR TEMP:** 3000K, **CRI:** 90+ **LUMENS:** lm 960 DELIVERED	52" D x 17.5" H **BLADE**: 3 x 22.6"	**AIRFLOW:** 4434 CFM **AIRFLOW EFFICIENCY** 65 CFM / W **ELECTRICITY USE:** 32W	12" (FRD12) 18" (FRD18) 24" (FRD24) 36" (FRD36) 48" (FRD48) 60" (FRD60) 72" (FRD72)
88793	2 x 9W LED **COLOR TEMP:** 3000K, **CRI:** 90+ **LUMENS:** lm 960 DELIVERED	52" D x 17.5" H **BLADE**: 3 x 22.6"	**AIRFLOW:** 4501 CFM **AIRFLOW EFFICIENCY** 95 CFM / W **ELECTRICITY USE:** 36W	
89906	2 x 9W LED **COLOR TEMP:** 3000K, **CRI:** 90+ **LUMENS:** lm 1680 DELIVERED	52" D x 19" H **BLADE**: 3 x 22.6"	**AIRFLOW:** 4578 CFM **AIRFLOW EFFICIENCY** 93 CFM / W **ELECTRICITY USE:** 37W	
89909	2 x 9W LED **COLOR TEMP:** 3000K, **CRI:** 90+ **LUMENS:** lm 1680 DELIVERED	52" D x 19" H **BLADE**: 3 x 22.6"	**AIRFLOW:** 4578 CFM **AIRFLOW EFFICIENCY** 93 CFM / W **ELECTRICITY USE:** 37W	

FINISH & MATERIAL

- **BLACK / BLACK WALNUT** (BK)
- **MATTE WHITE / WHITE & WHITE OAK** (MW)
- **SATIN NICKEL / SILVER/ GREYWOOD** (SN)

BLADES:

MATERIAL: PLYWOOD
PITCH: 12°

Includes:
4" & 6" Downrods



PULL CHAIN OPTIONS



SATIN NICKEL W/ BLACK BLADES



52" QUATTRO

QUATTRO | 88794

Featuring four straight fan blades in black on one side and silver on the other, as well as a black and matte white variant, the Quattro fan offers a modern yet transitional style at affordable prices. LED JA8 compatible lamps and a pull chain is supplied to power the fan.

Indoor | AC Motor | Plywood Blades | Reversible Blades

(WT) (WT/OAK)



REVERSIBLE BLADES



88784MW

(BK) (WN)



REVERSIBLE BLADES



88794BK
(AC PULL CHAIN)

(SV) (DW)



REVERSIBLE BLADES



88794SN
(AC PULL CHAIN)

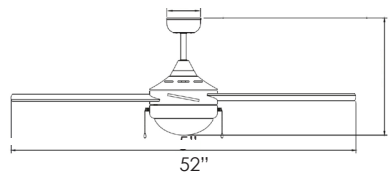



FCT8881WT
(Included w/ 88784)

	LAMPING	DIMENSIONS	ENERGY INFO AT HIGH SPEED	DOWNRODS
88784	18.5W LED, 120V **COLOR TEMP:** 3000K, **CRI:** 81.2+ **LUMENS:** lm 1175 DELIVERED	52" D x 17.25" H **BLADE**: 4 x 22.9"	**AIRFLOW:** 4518 CFM **AIRFLOW EFFICIENCY** 88 CFM / W **ELECTRICITY USE:** 36W	12" (FRD12) 18" (FRD18) 24" (FRD24) 36" (FRD36) 48" (FRD48) 60" (FRD60) 72" (FRD72)
88794	18.5W LED, 120V **COLOR TEMP:** 3000K, **CRI:** 81.2+ **LUMENS:** lm 1175 DELIVERED	52" D x 17.25" H **BLADE**: 4 x 22.9"	**AIRFLOW:** 4518 CFM **AIRFLOW EFFICIENCY** 88 CFM / W **ELECTRICITY USE:** 36W	

Includes:
6" Downrods

FINISH & MATERIAL

- **BLACK / WALNUT** (BK)
- **SATIN NICKEL / SILVER / DISTRESSEDWOOD** (SN)
- **MATTE WHITE / WHITE OAK** (MW)

BLADES

MATERIAL: PLYWOOD
PITCH: 10.5°





52"

LOWELL



LOWELL | 88808

Economical and good looking, the Lowell hugger fan is a streamlined design for low profile fans. No light kit, no visible hardware, no pull chain, this fan keeps it simple and stylish. A hardwired fan control is included to allow you to set the speed of the fan from a wall switch.

Indoor | AC Motor | Plywood Blades | Economic



88808MW

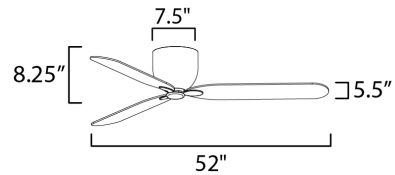



FCT88805WT
(Included)

88808

LAMPING	DIMENSIONS	ENERGY INFO AT HIGH SPEED
NO LIGHT KIT	52" D x 8.25" H **BLADE**: 3 x 24.25"	**AIRFLOW:** 4578 CFM **AIRFLOW EFFICIENCY** 93 CFM / W **ELECTRICITY USE:** 37W

FINISH & MATERIAL

☐ **MATTE WHITE** (MW)

BLADES

MATERIAL: PLYWOOD
PITCH: 12°







52"
SUPER-MAX

SUPER-MAX | 88935 | 88937

Super-Max updates a conventional indoor fan collection with refreshed blades, brackets, and motor housings for more transitional spaces. Choose from multiple fan light kits, including a two-light bowl and a streamlined LED uni-pack. Available in Matte Black with Black/Walnut blades, Satin Nickel with Silver/Distressed Wood, or White with White/White Oak blades, Super-Max offers reliable comfort with a familiar profile

Indoor | AC Motor | MDF Blades | Reversible Blades | Dual Mount

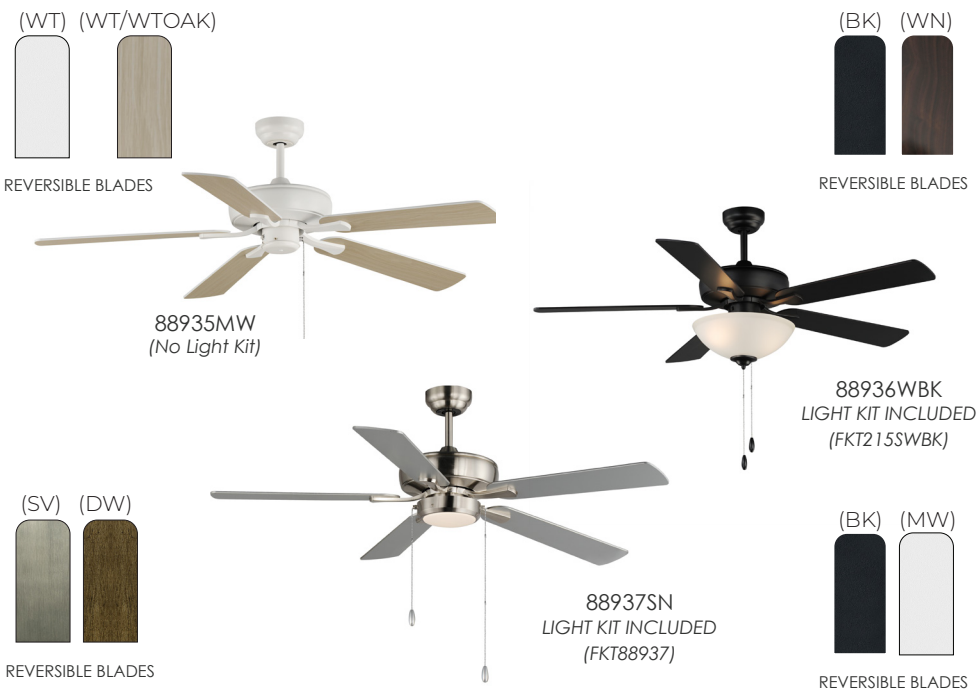

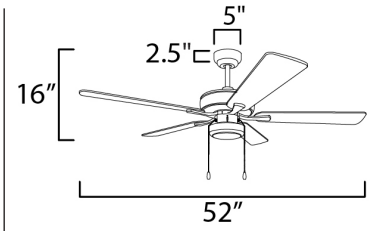

OPTIONAL LIGHT KITS
(Sold Separately)
(FKT88937)



(FKT215)



	LAMPING	DIMENSIONS	ENERGY INFO AT HIGH SPEED	DOWNRODS
88935	NO LIGHT KIT *(FKT OPTIONS ON PAGE 72)*	52" D x 14.5" H **BLADE**: 5 x 20.50"	**Airflow:** 4373 CFM **Airflow Efficiency:** 89 CFM / W **Electricity Use:** 37W	12" (FRD12) 18" (FRD18) 24" (FRD24) 36" (FRD36) 48" (FRD48) 60" (FRD60) 72" (FRD72)
88936	7W LED **COLOR TEMP:** 3000K, **CRI:** 90+ **LUMENS:** lm 1400 DELIVERED	52" D x 20" H **BLADE**: 5 x 20.50"	**Airflow:** 4373 CFM **Airflow Efficiency:** 89 CFM / W **Electricity Use:** 37W	
88937	16W LED **COLOR TEMP:** 3000K, **CRI:** 90+ **LUMENS:** lm 1000 DELIVERED	52" D x 16" H **BLADE**: 5 x 20.50"	**Airflow:** 4373 CFM **Airflow Efficiency:** 89 CFM / W **Electricity Use:** 37W	

FINISH & MATERIAL

- **BLACK / BLACK & WALNUT** (BK)
- **NATURAL AGED BRASS / BLACK & WHITE** (SWNAB)
- **SATIN NICKEL / SILVER & DISTRESSED WOOD** (SN)
- **MATTE WHITE / WHITE & WHITE OAK** (MW)

BLADES

MATERIAL: MDF
PITCH: 12°

Includes:
4" & 6" Downrods


PULL CHAIN OPTIONS


BLACK W/ WALNUT BLADES

52"

BASIC MAX



BASIC MAX-INDOOR | 89905 | 89907

The Basic-Max ceiling fan features the ability to be installed three different ways: dual mount, downrods, and optional stems up to 72" long.

Indoor | AC Motor | MDF Blades | Reversible Blades | Light Kit Adaptable | 3 Speed with Reverse

(SV) (WT/WTOAK)



REVERSIBLE BLADES



89905MW
(No Light Kit)

(SV) (MP)



REVERSIBLE BLADES



89905SNSM
(No Light Kit)



89907FTBKWP
(FKT210 Light Kit Included)

(BK) (WN)



REVERSIBLE BLADES

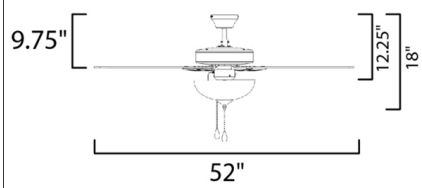

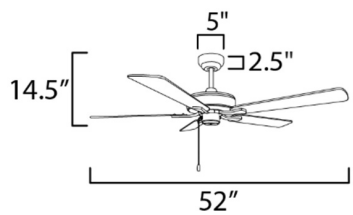

	LAMPING	DIMENSIONS	ENERGY INFO AT HIGH SPEED	DOWNRODS
89905	NO LIGHT KIT *(FKT OPTIONS ON PAGE 72)*	52"D x 12.5H **BLADES**: 5 x 20.5"	**AIRFLOW:** 4237 CFM **AIRFLOW EFFICIENCY** 78 CFM / W **ELECTRICITY USE:** 38W	12" (FRD12) 18" (FRD18) 24" (FRD24) 36" (FRD36) 48" (FRD48) 60" (FRD60) 72" (FRD72)
89907	4 x 9W LED E26 MED, **CRI:** 90+ **LUMENS:** lm 1680 DELIVERED	52"D x 18.25H **BLADE**: 5 x 20.5"	**AIRFLOW:** 4111 CFM **AIRFLOW EFFICIENCY** 78 CFM / W **ELECTRICITY USE:** 38W	

Includes:
4" Downrods

FINISH & MATERIAL

- **BLACK / WALNUT PECAN** (BKWP)
- **SATIN NICKEL / SILVER MAPLE** (SNSM)
- **OIL RUBBED BRONZE / WALNUT PECAN** (OIWP)
- **SATIN NICKEL / WALNUT PECAN** (SNWP)
- **MATTE WHITE** (MW)

BLADES

MATERIAL: MDF
PITCH: 12



WHITE W/ LIGHT OAK BLADES



OIL RUBBED BRONZE W/ WALNUT BLADES

52"

BASIC MAX



BASIC MAX-OUTDOOR | 89915

The Basic-Max ceiling fan features the ability to be installed three different ways: dual mount, downrods, and optional stems up to 72" long.

Outdoor | AC Motor | Damp Rated | Light Kit Adaptable | 3 Speed with Reverse



89915BK



89915OI

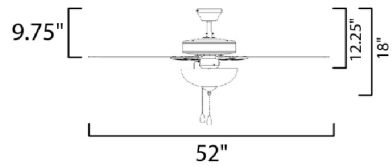

OPTIONAL Light Kits
(Sold Separately)



FKT206BK



FKT206OI



FKT206SN

89915

LAMPING	DIMENSIONS	ENERGY INFO AT HIGH SPEED		DOWNRODS
NO LIGHT KIT	52"D x 12.5"H **BLADE**: 5 x 20.5"	**AIRFLOW:** **AIRFLOW EFFICIENCY** **ELECTRICITY USE:**	4779 CFM 85 CFM / W 37W	12" (FRD12) 18" (FRD18) 24" (FRD24) 36" (FRD36) 48" (FRD48) 60" (FRD60) 72" (FRD72)

FINISH & MATERIAL

- **BLACK** (BK)
- **OIL RUBBED BRONZE** (OI)

BLADES

MATERIAL: ABS
PITCH: 12°

Includes:
4" Downrods





LIGHT KITS

Ceiling fan light kits can add both functionality and beauty to our line of Basic Max-Indoor, Basic max-Outdoor, and Super-Max Collection. These light kits are available in a variety of shapes and designs.



1 LIGHT

FKT206 BK, OI, **SN**
Outdoor Fan Kit
DAMP
A



3 LIGHT

FKT207 FTMW, FTOI, **FTSN**
Fan Kit
B



3 LIGHT LED

FKT208 FTBK, **FTOI**, FTSN
Fan Kit
C



3 LIGHT

FKT209 FTMW, **FTOI**, FTSN
Fan Kit
D



4 LIGHT LED

FKT210 FTBK, FTOI, **FTSN**
Fan Kit
E



3 LIGHT

FKT213 FTBK, FTSN
Fan Kit
F



2 LIGHT LED

FKT214 FTBK, FTOI, FTSN
Fan Kit
G



LED

FKT215SWMW, SN, BK, NAB
Fan Kit
H



LED

FKT88937MW, SN, BK
Fan Kit
I

	ITEM#	LAMPING	DIMENSION	CRI	LUMENS
A	FKT206	1 x 60W CA, Incan	7"W x 3.15"H		
B	FKT207	3 x 60W CA, Incan	12"W x 6.25"H		
C	FKT208	3 x 9W MB LED 3000K (Incl.)	13.5"W x 6.5"H	90+	1200
D	FKT209	3 x 60W CA, Incan	13"W		
E	FKT210	4 x 9W MB LED (Not Incl.)	15"W x 6.75"H		
F	FKT213	3 x 40W CA, Incan	11.75"W x 6"H	90+	1000
G	FKT214	2 x 9W MB LED 3000K (Incl.)	12.5"W x 7"H	90+	810
H	FKT215	14W LED E26	12.25"W x 7"H		
I	FKT88937	16W LED 3000K	7"W x 1.75"H	90+	1000

Finish Options: Frosted (FT), Black (BK), Matte White (MW), Oil Rubbed Bronze (OI), Satin Nickel (SN)

HOUSING FINISHES


ALUMINUM (AL)


BLACK (BK)


BLACK / GOLD (BKGLD)


SATIN NICKEL (SN)


DARK SATIN NICKEL (DSN)


CHARCOAL (CHL)


BLACK / NATURAL AGED BRASS (BKNAB)


MATTE WHITE (MW)


NATURAL AGED BRASS (NAB)


OIL RUBBED BRONZE (OI)

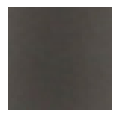
CHARCOAL (CHL)

FANDELIGHT FINISHES

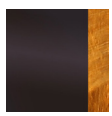
BRONZE / GOLD (BZGLD)


BLACK (BK)


SATIN NICKEL (SN)


DRIFTWOOD / BLACK (DWBK)

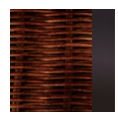
DARK RATTAN / DARK BRONZE (RADBZ)


NATURAL / DARK BRONZE (NADBZ)


BRONZE GILT (BZGLT)


SILVER MIST (SM)


GOLDEN SILVER (GS)


ANTIQUE PECAN / ANTHRACITE (APAR)


BLACK / NATURAL AGED BRASS (BKNAB)

BLADE FINISHES | *WOOD, PLYWOOD / MDF, ABS, ALUMINUM*

ABS BLADES:

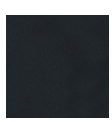
BLACK (BK)


TEAK (TK)


DRIFTWOOD (DW)


GREY WOOD (GW)


WHITE (WT)


SILVER (SV)


WALNUT (WN)


SILVER MIST (SM)


GOLDEN SILVER (GS)

WOOD BLADES:


WHITE (WT)


BLACK (BK)

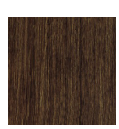
WALNUT (WN)

PLYWOOD / MDF BLADES:

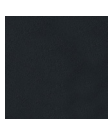
BLACK (BK)


SILVER / BLACK WALNUT (SV/BKWN)


SILVER / WALNUT (SV/WN)


SILVER / MAPLE (SV/MP)


WHITE / OAK (WT/OK)

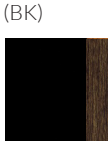
BLACK / WALNUT (BK/WN)

BLACK / MATTE WHITE (BK/MW)

SILVER / WHITE (SV/WT)

WHITE (WT)

ALUMINUM BLADES:

ALUMINUM (AL)

DOWNRODS

Optional fan rods lower the breeze for more efficient air circulation. Maxim provides a range of sizes for fan rods from 12" to 72" to accommodate taller ceiling heights. Please review the below chart to confirm if you require an additional fan rod in your application.

DOWNROD CAPABILITY CHART

DOWN ROD LENGTH *(SUGGESTED)*	6"	12"	18"	24"	36"	48"	60"	72"	**FINISHES**
CEILING HEIGHT	8 FT	9 FT	10 FT	11 FT	12 FT	13 FT	14 FT	15 FT	
STANDARD SIZE	FRD 06	FRD 12	FRD 18	FRD 24	FRD 36	FRD 48	FRD 60	FRD 72	BK (MATTE BLACK) MW (MATTE WHITE) SN (SATIN NICKEL) OI (OIL RUBBED BRONZE)
0.85" OD COMPATIBLE WITH:	**BASIC-MAX:** 89905, 89907, 89915 | **SUPER-MAX:** 89935, 89936, 89937 | **TRIO:** 89906, 89909 **SERENE:** 88841 | **TANKER:** 88805, 88806, 88816 | **CUPOLA:** 88801, 88802 | **ULTRA SLIM:** 88807 **DAISY:** 88826 **QUATTRO:** 88794								
SELECT SIZE	FRD 100 06	FRD 100 12	FRD 100 18	FRD 100 24	FRD 100 36	FRD 100 48	FRD 100 60*	FRD 100 72*	BK (MATTE BLACK) MW (MATTE WHITE) SN (SATIN NICKEL) CHL (CHARCOAL) *NAB (AGED BRASS) DSN (DARK SATIN NICKEL) *FINISH NOT AVAILABLE IN THIS LENGTH
1.00" OD COMPATIBLE WITH:	**WOODWIND:** 88831, 88833, 88834 | **VORTEX:** 88836, 88837, 88839, 88846, 88847, 88849 **KEANU:** 88753, 88754, 88755 | **FALCON:** 88707, 88708, 88717 | **HELM:** 88878 | **BOLA:** 88811 **CONDOR:** 88766, 88767, 88768 | **SEABORNE:** 88723								
FANDELIGHT	FRD 01 06	FRD 01 12	FRD 01 18	FRD 01 24	FRD 01 36				BK (BLACK) AR (ANTHRACITE) GS (GOLDEN SILVER) SM (SILVER MIST) SN (SATIN NICKEL) DBZ (DARK BRONZE) BZGT (BRONZE GILT)
CEILING HEIGHT	**ODEON:** 61018 | **SOLITAIRE:** 61013 | **BODEGA BAY:** 61004 | **SOLSTICE:** 61005 | **CORONA:** 61001, 61002 **JEWEL:** 61019 | **AMBIENCE:** 61009 | **WEAVE:** 61010 | **TULUM:** 61012, 61014 | **PORTCULLIS:** 61016								

FAN HEIGHT TIP: INSTALL YOUR FAN BETWEEN 84-96" ABOVE THE FINISHED FLOOR

STANDARD CEILING INSTALLATION

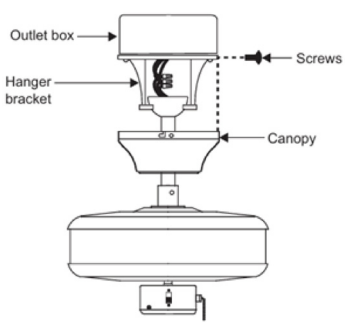

CLOSE-TO-CEILING INSTALLATION

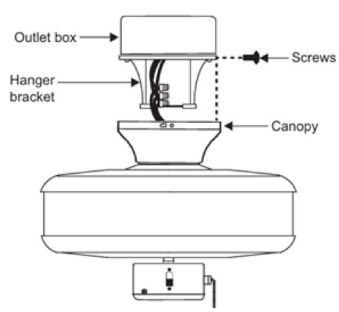

Directly mount canopy to fan housing using screws provided

SLOPED CEILING FAN ADAPTERS



FSCA45Sxx

Sloped ceiling fan rod adapter for 0.85" Fan Rod.

*Adapter Accessory



FSCKT45xx

Sloped ceiling fan canopy kit for all 1" Fan Rod.

*Includes canopy and sloped ceiling adapter accessory

AVAILABLE FINISHES

(BK) (SN) (OI) (MW)

(BK) (SN) (CHL) (MW) (NAB)

FAN TIPS

Winter:
Clockwise

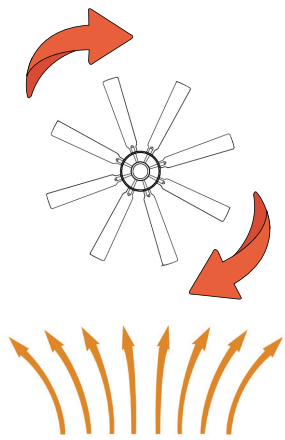

Summer:
CounterClockwise

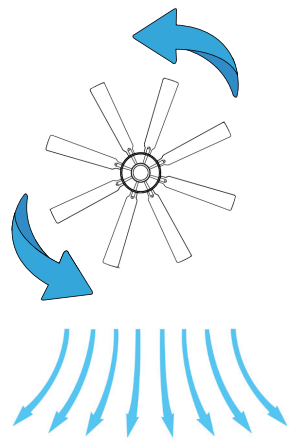

MOUNTING OPTIONS

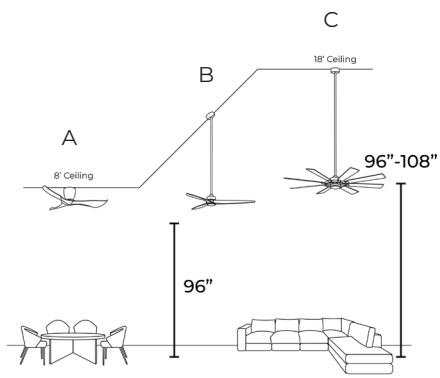

A fan should be 96" from the ground to the ceiling.

Side Note: Below are 3 Mounting options.

A

CLOSE TO CIELING

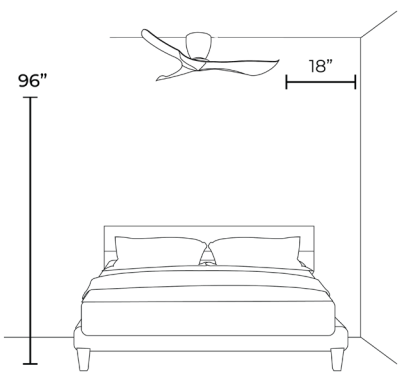

A fan should be 84" from the ground while keeping 36-48" above the bed. Leave an 18" distance from any surrounding walls.

Note: See Fan Sizing Per SQ.FT below.

B

SLOPED CIELING

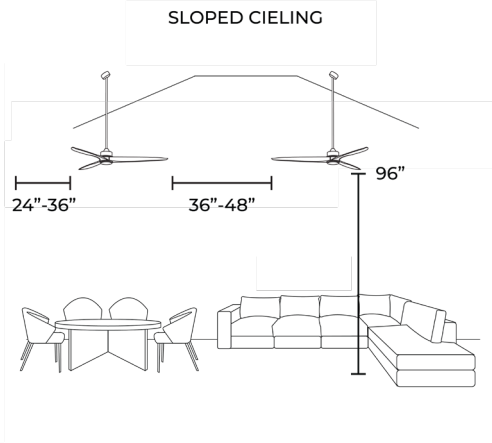

Large open spaces may require more than one fan in the room. Fans should be spaced 24-36" away from any wall, and leave at least 36-48" between fans.

Note: Slope ceiling adapter needed for over 20° pitch.

C

EXTENDED -
HIGH CIELINGS

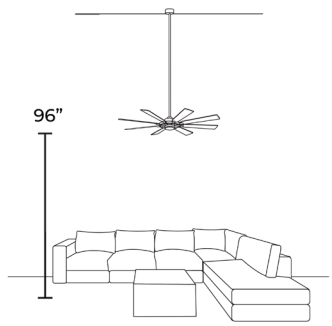

A fan should be 84" from the ground while keeping 36-48" above a seating area.

Note: See down rod capability chart.

Sizing a Fan

90-120 SQ. FT.	120-350 SQ. FT.	OVER 350 SQ. FT.
	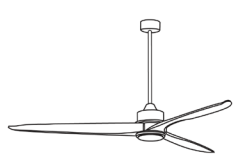	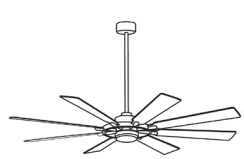
44"-52"	48" -58"	60" OR LARGER FANS

CONTROLS

Easily adjust the speed and direction of your fan with a wall control. Adjust color temperature using a color tunable fan and wall control.



FCT88805WT
Fan Control Only
Three Speed Fan Control

Included with:
88805, 88807, 88808



FCT88801WT
AC Motor Wall Control
3-Wire
Light and Fan Speed Controls
On/Off Rocker Switch for Light

Included with:
88801, 88802, 88806, 89909



FCT 8881WT
AC Wall Control
3-Wire
Light Dimming and Fan Control
*Included

Included with:
88801, 88802, 88803, 88806, 88783
89909, 88826, 88708, 88723, 88784



FCT88816WT
Hard Wired DC Wall Remote
Fan Speed Control
On/Off Light Control
Paired with Controller

Included with:
88816



FCT 887WT
Hard wired DC Wall Control
2-Wire
Light Dimming and Fan Control

Included with:
88708, 88717, 88753, 88754,
88755, 88766, 88767, 88768



FCT8883WT
DC Wall Remote
Speed Fan Control
Light Control: Dimming & CCT Select 27-40K
Reverse Function

Included with:
88831, 88833, 88834, 88836, 88837, 88839,
88841, 88846, 88847, 88849, 88878,
88811, 88830



FCTHAND
Universal AC Wall Remote
*Optional

Compatible with All AC Motorized Fans

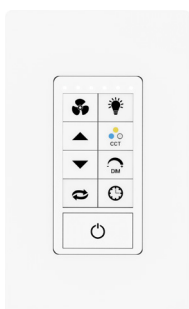

FSWT887WT
Hard wired DC Fan Wall Control



FRM8883_WT
DC Fan Remote Control

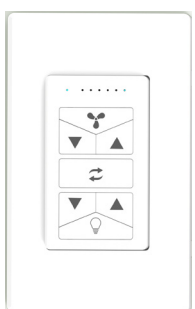

FCT8883_WT
Hard wired DC Fan Wall Control

FANDELIGHT™



FCT 6000WT
FANDELIGHT ™ Wall Remote
Magnetically Connect to Wall Plate
Light Dimming
Battery Included

Compatible with:
60002, 61004, 61009, 61013,
61016, 61018, 61022, 61010



FCT 6100WT
FANDELIGHT ™ Wall Remote
Magnetically Connect to Wall Plate,
Light Dimming and CCT Tunning 27-40K
Battery Operated

Compatible with:
61002, 61006, 61010, 61012,
61014, 61019, 61005, 61001



RESOURCES



The direct current fans, or DC fans, are powered with a potential of fixed value such as the voltage of a battery, An AC fan motor is an electromechanical device that converts electrical energy into mechanical energy to rotate fan blades.



Damp Rated Fans are suitable for use in outdoor areas with covered ceilings such as patios or open walkways.



Wet Rated fans are approved for use outdoors that may experience direct contact with water.



The ETL Listed Mark indicates to distributors, retailers and customers that your product has been tested by Intertek and found in compliance with accepted national standards.



Energy Star is a government-backed labeling program that helps people and organizations save money and reduce greenhouse gas emissions by identifying items that have superior energy efficiency.



California Energy Commission regulation that lists both Title 20 and Title 24 Appliance energy requirements.



Department of Energy (DOE) federally regulated Fan listing.



Dimmable led lights mean you can adjust the brightness or lumen levels according to your needs.



Wi-Fi enabled means that a device can connect to the Internet when there is a local Wi-Fi network connection available.



Wi-Fi enabled Control allows the user to control color temperatures between a range, typically between warm 2700 and cool 5000K and everything in between.



Either toggle or remote based switch that allows the user to define between 3-5 fixed color temperatures with memory function.

WARRANTY

1. **Limited Lifetime Motor Warranty:**
If any part of our fan motor fails, due to a defect in materials or workmanship during the lifetime of the original purchaser, Maxim Group will provide the replacement part free of charge, when the defective fan is returned to our national service center. Proof of purchase is required is required. The customer shall be responsible for all costs incurred in removal or reinstallation and shipping of the product for repairs or replacement.

2. **One Year Motor Labor Warranty:**
If your fan motor fails at any time within one year from the original purchase, due to defects in materials or workmanship, labor to repair the motor will be provided free of charge at our national service center. The purchaser will be responsible for labor charges after this one-year period. Customer shall be responsible for all costs incurred in the removal or installation and shipping of the product for repairs or replacement.

3. **If any other part of your fan fails at any time within one year after original purchase**, due to defect in materials or workmanship, we will repair or replace, at our option, the defective part free of charge for parts and labor performed at our national service center.

4. **Because of varying climate conditions,** this warranty does not cover changes in the finish, including rusting, pitting, corroding, tarnishing, or peeling.

5. **This warranty is void and does not apply to** damage from improper installation, neglect, accident, misuse, exposure to extremes of heat or humidity, or because of any modification to the original product.

6. **All costs of removal and reinstallation of the fan** are the sole responsibility of the owner of the fan and not the store that sold the fan or Maxim Group.

7. **Maxim Group reserves the right to modify or discontinue** any product at any time and may substitute any part under warranty.

8. **Under no circumstances may a fan be returned without prior authorization from Maxim Group.** The receipt of purchase must accompany authorized returns and must be sent freight prepaid to Maxim Group. The fan to be returned must be properly packed to avoid damage in transit; Maxim Group will not be responsible for any damage resulting for improper packaging.

9. **It is understood that any repair or replacement is the exclusive remedy available from Maxim Group.** There is no other expressed or implied warranty. Maxim Group hereby disclaims any and all implied warranties, including, but not limited to those of merchantability and fitness for a particular purpose to the extent permitted by law. Some states do not allow limitations or implied warranties. Maxim Group will not be liable for incidental, consequential, or specials damages arising out or in conjunction with the product use or performance, except as may otherwise be accounted by law. This warranty gives you special legal rights and may also have other rights that vary from state to state.

10. **A certain amount of wobble is normal** and should not be considered a problem or a defect.

MAXIM®
LIGHTING

maximlighting.com