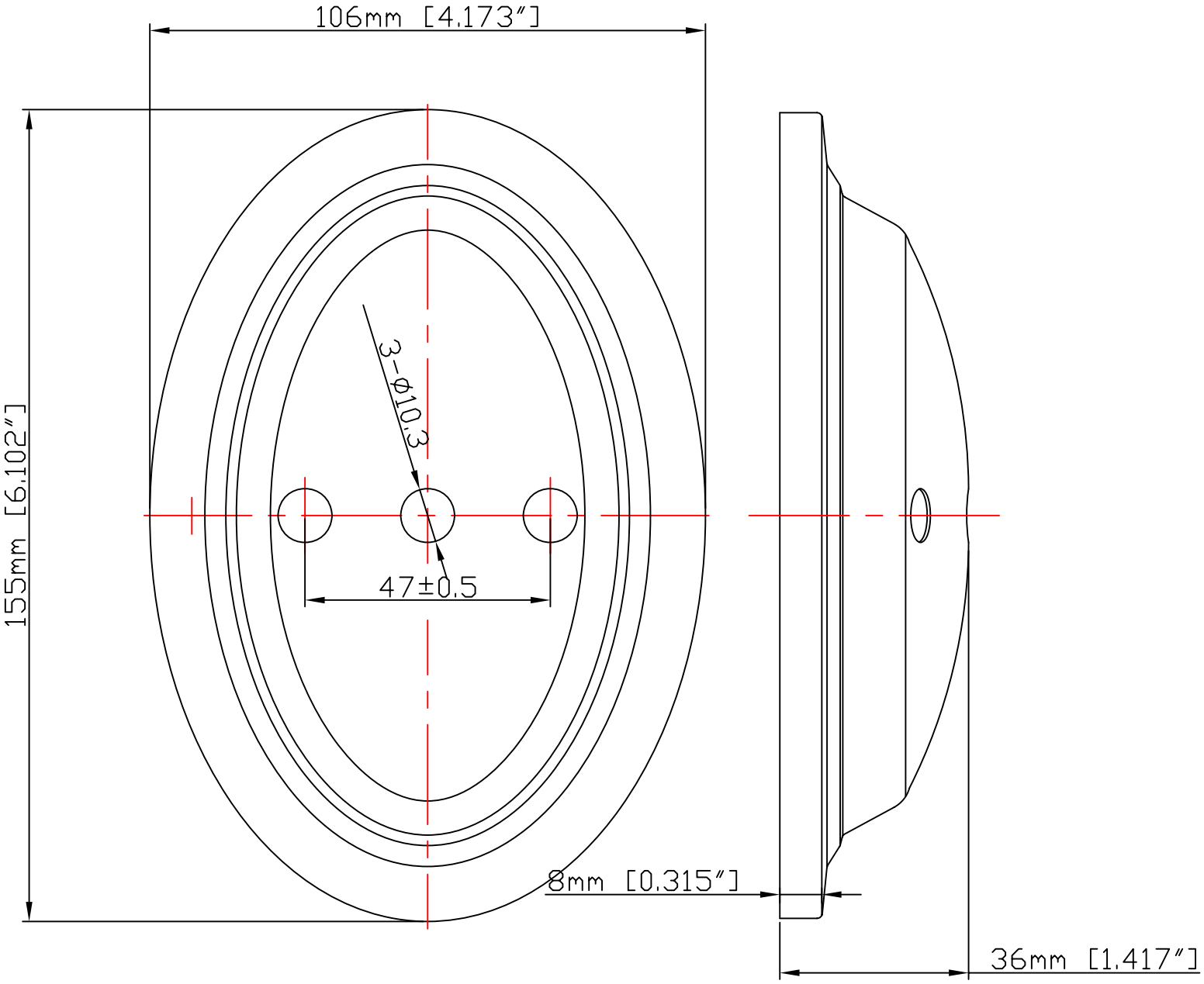
106mm [4.173″]
155mm [6.102″]
3-Φ10.3
47±0.5
8mm [0.315″]
36mm [1.417″]