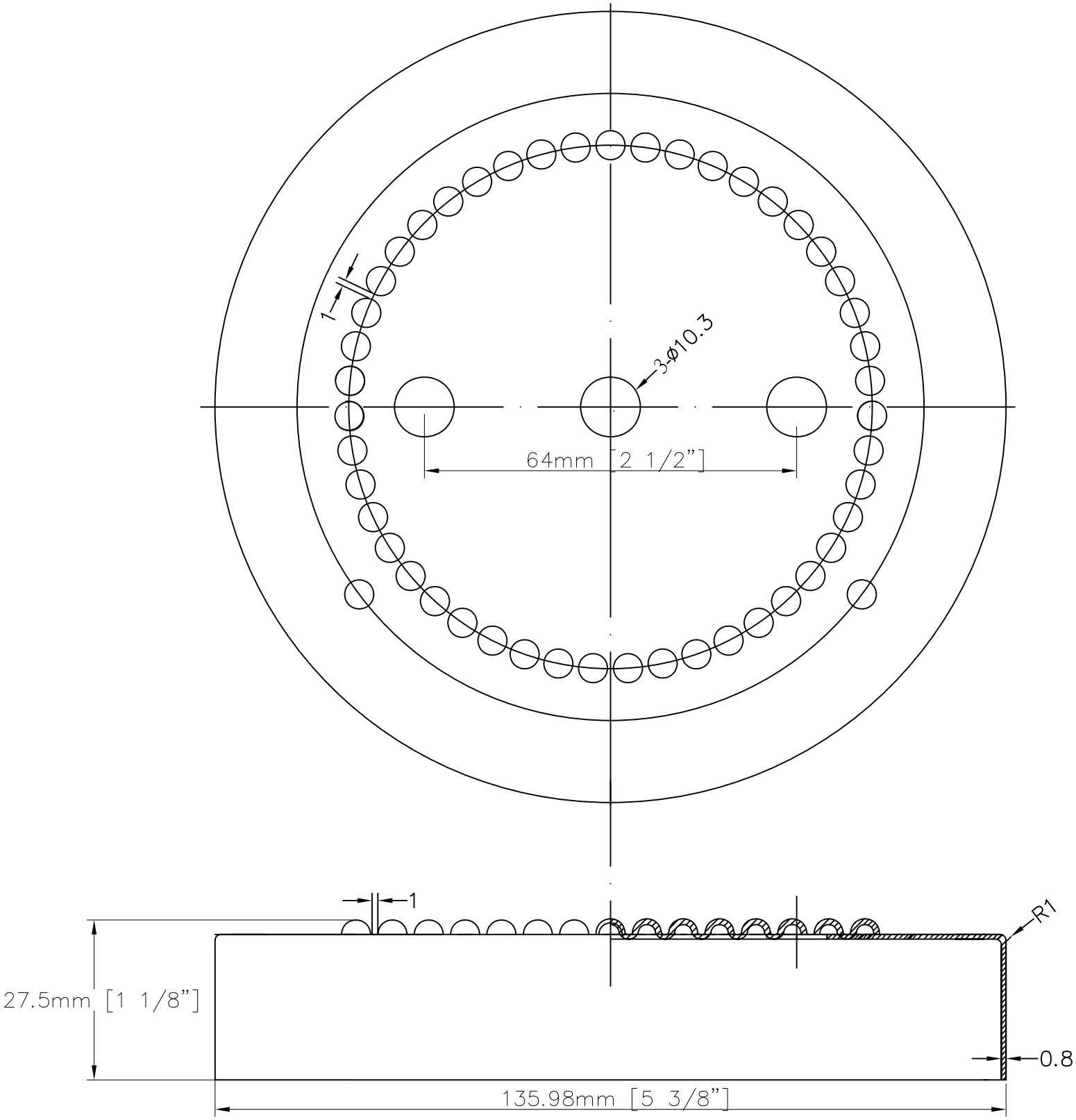
1
3-Ø10.3
64mm [2 1/2"]
1
R1
27.5mm [1 1/8"]
0.8
135.98mm [5 3/8"]