MAXIM LIGHTING

PRODUCT NAME: **Taylor 1 Light Wall Sconce**
ITEM NUMBER: 21659

Please consult your electrician for hanging fixture and wiring.

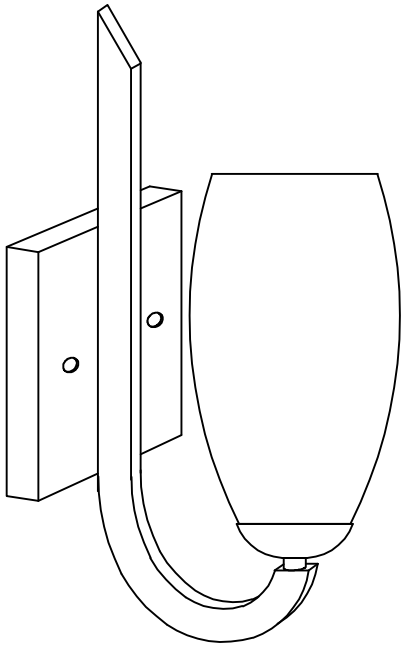

1*E26*60W(NO INCLUDED BULB)

Locate all hardware & components before discarding packaging
Cleaning & Care:
Clean with soft cloth and a mild detergent.
DO not use abrasive cleaner.

PRODUCTS ARE NOT INTENDED FOR COMMERCIAL USE.

MADE IN CHINA

MAXIM LIGHTING

PRODUCT NAME: **Taylor 1 Light Wall Sconce**
ITEM NUMBER: 21659

CAUTION:Turn off the main power at the circuit breaker before installing and servicing the fixture to prevent possible injury from electric shock.
All electrical connections must be in accordance with local and National Electrical Code (N.E.C.) standards.
If you are unfamiliar with proper electrical wiring connections, obtain the services of a qualified electrician.

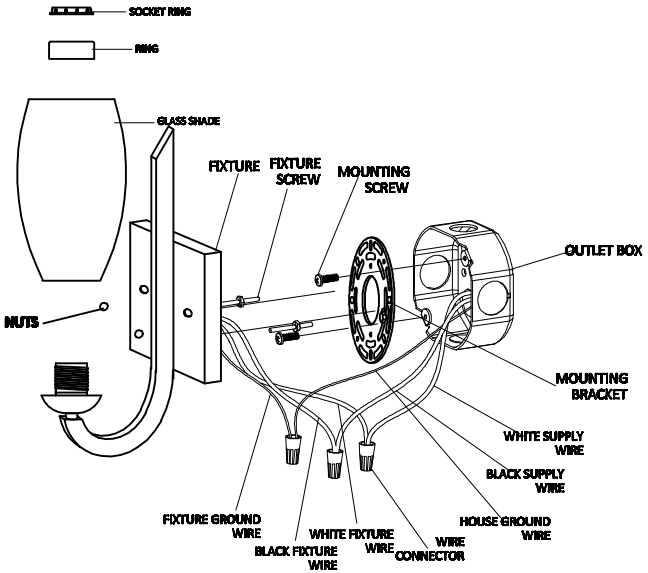

1. **Remove MOUNTING BRACKET from fixture and install to ELECTRICAL BOX using FIXTURE SCREWS. HEX NUTS can be adjusted for the fixture to sit flush with the wall.**
2. **Wire fixture to wires in outlet box. Bare wire is for Ground.**
3. **Attach back plate to MOUNTING BRACKET and tighten BALL NUTS so fixture meets wall. FIXTURE SCREWS should protrude from BACK PLATE ¼".**
4. **Slide the GLASS over the socket and use RING spacer and SOCKET RING to secure.**
5. **Install bulbs to fixture according to fixture's max wattage rating label.**

PRODUCTS ARE NOT INTENDED FOR COMMERCIAL USE.

MADE IN CHINA