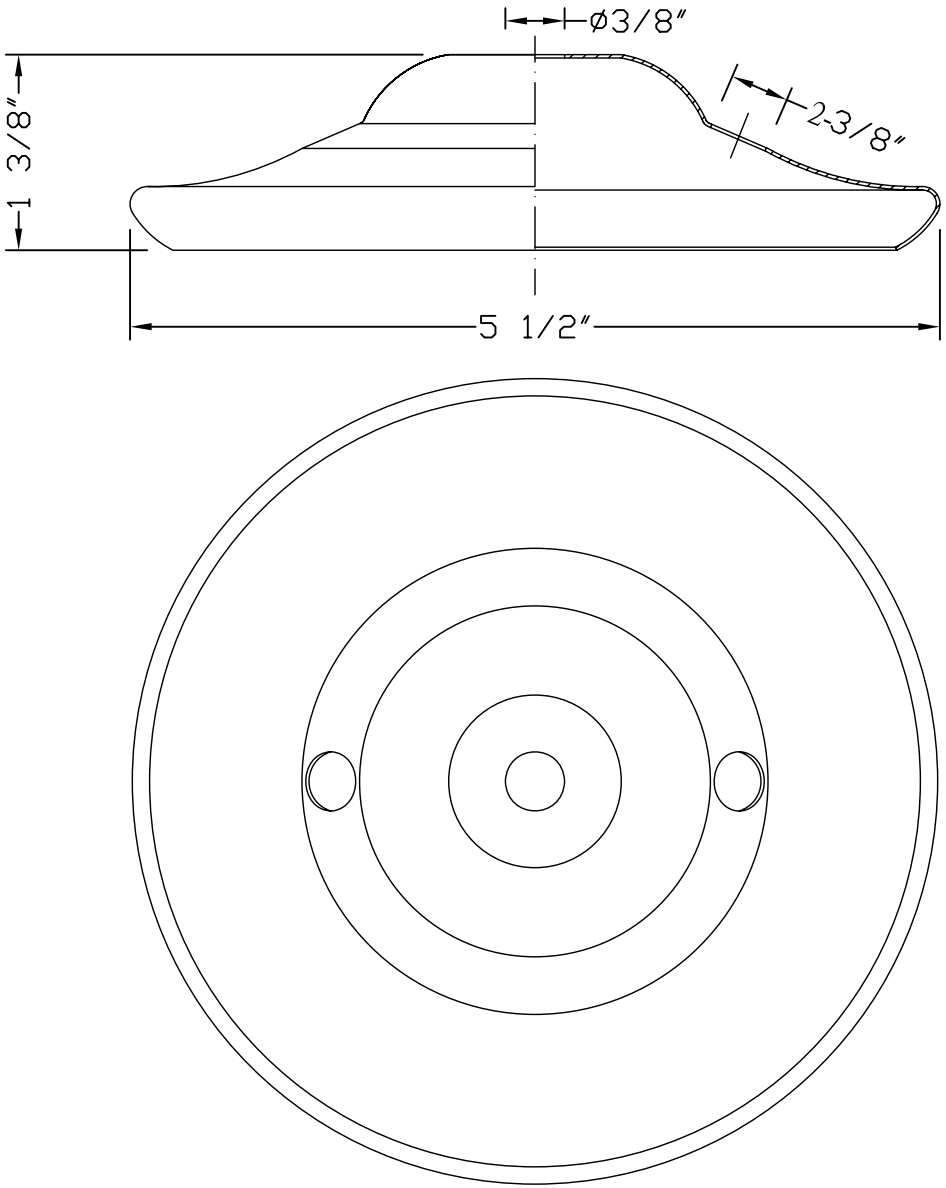
ø3/8"
2-3/8"
1 3/8"
5 1/2"