Basix | 10127ICSN

Job Name:_____ Job Type:_____ Quantity:_____ Comments:_____

PRODUCT DESCRIPTION

Contemporary collection with sweeping arms and clean lines. Offered in Ice glass and Satin Nickel finish or Wilshire glass and Oil Rubbed Bronze finish.

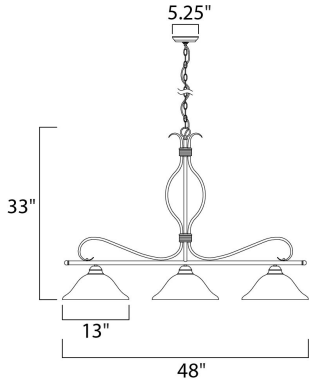

MEASUREMENTS

DIMENSION	: 48" L x 13" W x 33" H
CANOPY	: 5.25" W x 1.5" H x 5.25" L
HANGING WEIGHT	: 13.05 lb

LAMPING

INPUT VOLTAGE	: 120V
BULB	: 3 x 60W Incandescent E26 Medium , 180W Total
BULB INCLUDED	: (Not Included)
DIMMABLE	: Yes

FINISHES OPTION

Oil Rubbed Bronze (OI)

Satin Nickel (SN)

GLASS

Ice IC

MATERIAL

Steel, Glass

RATINGS

cETLus
Dry Location

ADDITIONAL

ADJUSTABLE
OPERATING TEMPERATURE:
-20°C (-4°F), 40°C (104°F)

Always consult a qualified electrician before installing any lighting product.

MAXIM LIGHTING

WESTERN DISTRIBUTION CENTER (HEADQUARTER)
253 NORTH VINELAND AVE I CITY OF INDUSTRY, CA 91746

EASTERN DISTRIBUTION CENTER
101 GARDNER PARK | PEACHTREE CITY, GA 30269

P. 626.956.4200 I F. 626.956.4225 I maximlighting.com