Knoxville | 1135CLBZ

Job Name:_____ Job Type:_____ Quantity:_____ Comments:_____

PRODUCT DESCRIPTION

Knoxville is an updated take on the traditional lantern style. Finished in Bronze and with the option of Clear or Frosted glass, our Incandescent version is sure to wow.

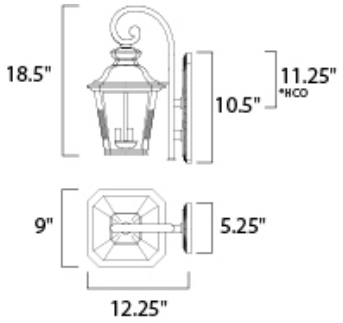

*height from center of outlet to the top of the fixture

MEASUREMENTS

DIMENSION	: 9" W x 18.5" H x 12.25" Ext
BACK PLATE	: 5.25" W x 10.5" H x 11.25" HCO
HANGING WEIGHT	: 5.9 lb

LAMPING

INPUT VOLTAGE	: 120V
BULB	: 3 x 40W Incandescent E12 Candelabra , 120W Total
BULB INCLUDED	: (Not Included)
DIMMABLE	: Yes

FINISHES OPTION

Bronze (BZ)

GLASS

Clear CL

MATERIAL

Aluminum, Glass

RATINGS

cETLus
Wet Location

ADDITIONAL

OPERATING TEMPERATURE:
-20°C (-4°F), 40°C (104°F)

Always consult a qualified electrician before installing any lighting product.

MAXIM® LIGHTING

WESTERN DISTRIBUTION CENTER (HEADQUARTER)
253 NORTH VINELAND AVE I CITY OF INDUSTRY, CA 91746

EASTERN DISTRIBUTION CENTER
101 GARDNER PARK | PEACHTREE CITY, GA 30269

P. 626.956.4200 I F. 626.956.4225 I maximlighting.com