Crest | 20291WLOIAB

Job Name:_____ Job Type:_____ Quantity:_____ Comments:_____







PRODUCT DESCRIPTION

Stately lanterns finished in Oil Rubbed Bronze with contrasting Antique Brass clusters provide a classic yet modern approach to lighting. Cast socket covers add an upscale element to this competitive collection.

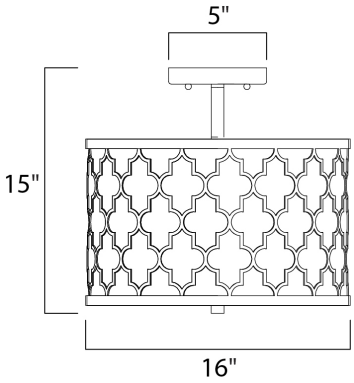

MEASUREMENTS

DIMENSION	: 16" L x 16" W x 15" H
CANOPY	: 6" W x 0.75" H x 6" L
HANGING WEIGHT	: 9.9 lb
WIRE LENGTH	: 120"

LAMPING

INPUT VOLTAGE	: 120V
BULB	: 3 x 60W Incandescent E26 Medium , 180W Total
BULB INCLUDED	: (Not Included)
DIMMABLE	: Yes

FINISHES OPTION

Oil Rubbed Bronze / Antique Brass (OIAB)

MATERIAL

Steel, Glass, Fabric

RATINGS

cETLus
Damp Location

ADDITIONAL

OPERATING TEMPERATURE:
-20°C (-4°F), 40°C (104°F)

Always consult a qualified electrician before installing any lighting product.

MAXIM LIGHTING®

WESTERN DISTRIBUTION CENTER (HEADQUARTER)
253 NORTH VINELAND AVE I CITY OF INDUSTRY, CA 91746

EASTERN DISTRIBUTION CENTER
101 GARDNER PARK | PEACHTREE CITY, GA 30269

P. 626.956.4200 I F. 626.956.4225 I maximlighting.com