Era | 21677CDBK

Job Name:_____ Job Type:_____ Quantity:_____ Comments:_____







PRODUCT DESCRIPTION

Geometric metal frames finished in Black support panes of clear Seedy glass, provides for a refined restoration look. Add vintage bulbs (not included) to complete the authentic feel of this design.

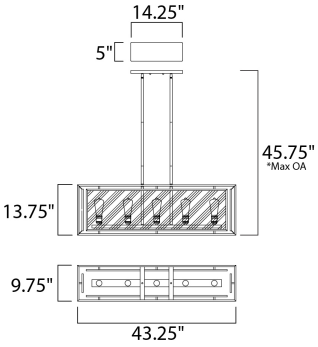

*max overall height

MEASUREMENTS

DIMENSION	: 43.25" L x 9.75" W x 13.75" H
MAX OAH	: 45.75" OAH
CANOPY	: 14.25" W x 0.75" H x 5" L
HANGING WEIGHT	: 25.96 lb

LAMPING

INPUT VOLTAGE	: 120V
BULB	: 5 x 60W Incandescent E26 Medium , 300W Total
BULB INCLUDED	: (Not Included)
DIMMABLE	:

FINISHES OPTION

Black (BK)

GLASS

Seedy CD

MATERIAL

Steel, Glass

RATINGS

cETLus
Dry Location

ADDITIONAL

ADJUSTABLE
OPERATING TEMPERATURE:
-20°C (-4°F), 40°C (104°F)

Always consult a qualified electrician before installing any lighting product.

MAXIM LIGHTING

WESTERN DISTRIBUTION CENTER (HEADQUARTER)
253 NORTH VINELAND AVE I CITY OF INDUSTRY, CA 91746

EASTERN DISTRIBUTION CENTER
101 GARDNER PARK | PEACHTREE CITY, GA 30269

P. 626.956.4200 I F. 626.956.4225 I maximlighting.com