Orbit | 25145OI

Job Name:_____ Job Type:_____ Quantity:_____ Comments:_____

PRODUCT DESCRIPTION

A spherical frame of metal surround a simple line chandelier draped in crystal for a transitional style that fits any interior design. Orbit is available in 2 sizes and 2 finishes, Oil Rubbed Bronze with Cognac crystal and a combo finish of Anthracite and Polished Nickel with Clear crystal.

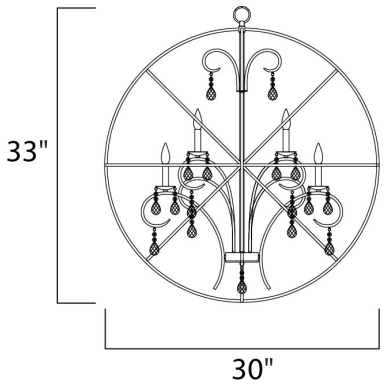

MEASUREMENTS

DIMENSION	: 30" L x 30" W x 33" H
MAX OAH	: 69" OAH
CANOPY	: 5" W x 1" H x 5" L
HANGING WEIGHT	: 21.56 lb

LAMPING

INPUT VOLTAGE	: 120V
BULB	: 9 x 60W Incandescent E12 Candelabra , 540W Total
BULB INCLUDED	: (Not Included)
DIMMABLE	: Yes

FINISHES OPTION

Anthracite / Polished Nickel (ARPN)

Oil Rubbed Bronze (OI)

MATERIAL

Steel, Crystal

RATINGS

cULus
Dry Location

ADDITIONAL

ADJUSTABLE
OPERATING TEMPERATURE:
-20°C (-4°F), 40°C (104°F)

Always consult a qualified electrician before installing any lighting product.

MAXIM LIGHTING

WESTERN DISTRIBUTION CENTER (HEADQUARTER)
253 NORTH VINELAND AVE I CITY OF INDUSTRY, CA 91746

EASTERN DISTRIBUTION CENTER
101 GARDNER PARK | PEACHTREE CITY, GA 30269

P. 626.956.4200 I F. 626.956.4225 I maximlighting.com