Malaga | 2684MROI

Job Name:_____ Job Type:_____ Quantity:_____ Comments:_____

PRODUCT DESCRIPTION

Maxim Lighting's commitment to both the residential lighting and the home building industries will assure you a product line focused on your basic lighting needs. With the Malaga collection you will find quality lighting that is well designed, well priced and readily available.

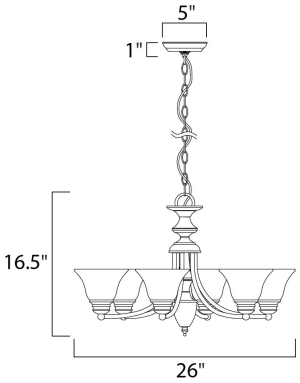

MEASUREMENTS

DIMENSION : 26" L x 26" W x 16.5" H

HANGING WEIGHT : 10.58 lb

LAMPING

INPUT VOLTAGE : 120V

BULB : 6 x 60W Incandescent E26 Medium , 360W Total

BULB INCLUDED : (Not Included)

DIMMABLE : Yes

FINISHES OPTION

Oil Rubbed Bronze (OI)

Satin Nickel (SN)

GLASS

Marble MR

MATERIAL

Steel, Glass

RATINGS

cETLus

Dry Location

ADDITIONAL

ADJUSTABLE

OPERATING TEMPERATURE:

-20°C (-4°F), 40°C (104°F)

Always consult a qualified electrician before installing any lighting product.

MAXIM® LIGHTING

WESTERN DISTRIBUTION CENTER (HEADQUARTER)

253 NORTH VINELAND AVE I CITY OF INDUSTRY, CA 91746

EASTERN DISTRIBUTION CENTER

101 GARDNER PARK | PEACHTREE CITY, GA 30269

P. 626.956.4200 I F. 626.956.4225 I maximlighting.com