Dover DC | 3025CDBZ

Job Name:_____ Job Type:_____ Quantity:_____ Comments:_____

PRODUCT DESCRIPTION

Dover Cast is a traditional, Mediterranean style collection from Maxim Lighting International in Bronze finish with Seedy glass.

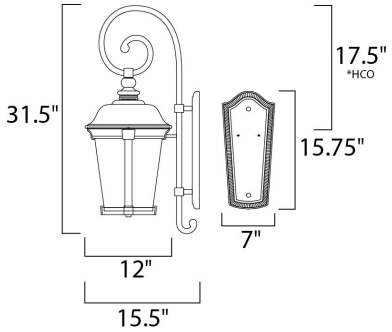

*height from center of outlet to the top of the fixture

MEASUREMENTS

DIMENSION	: 12" W x 31.5" H x 15.5" Ext
BACK PLATE	: 7" W x 15.75" H x 15.5" HCO
HANGING WEIGHT	: 13 lb

LAMPING

INPUT VOLTAGE	: 120V
BULB	: 3 x 40W Incandescent E12 Candelabra , 120W Total
BULB INCLUDED	: (Not Included)
DIMMABLE	: Yes

FINISHES OPTION

Bronze (BZ)

GLASS

Seedy CD

MATERIAL

Die Cast Aluminum

RATINGS

cETLus
Wet Location

ADDITIONAL

OPERATING TEMPERATURE:
-20°C (-4°F), 40°C (104°F)

Always consult a qualified electrician before installing any lighting product.

MAXIM LIGHTING

WESTERN DISTRIBUTION CENTER (HEADQUARTER)
253 NORTH VINELAND AVE I CITY OF INDUSTRY, CA 91746

EASTERN DISTRIBUTION CENTER
101 GARDNER PARK | PEACHTREE CITY, GA 30269

P. 626.956.4200 I F. 626.956.4225 I maximlighting.com