Portsmouth | 30504CDOI

Job Name:_____ Job Type:_____ Quantity:_____ Comments:_____



PRODUCT DESCRIPTION

Portsmouth is a traditional, early American style collection from Maxim Lighting International in Oil Rubbed Bronze finish with Seedy glass.

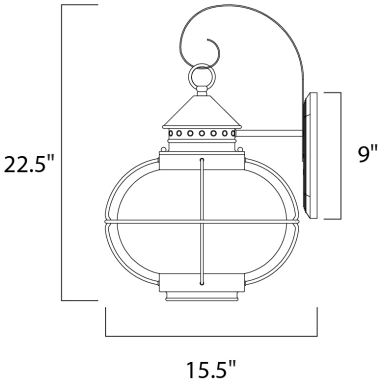

MEASUREMENTS

DIMENSION	: 14" W x 22.5" H x 15.5" Ext
BACK PLATE	: 4.5" W x 9" H x 8.5" HCO
HANGING WEIGHT	: 5.07 lb

LAMPING

INPUT VOLTAGE	: 120V
BULB	: 1 x 60W Incandescent E26 Medium , 60W Total
BULB INCLUDED	: (Not Included)
DIMMABLE	:

FINISHES OPTION

Oil Rubbed Bronze (OI)

GLASS

Seedy CD

MATERIAL

Aluminum, Glass

RATINGS

cETLus
Wet Location

ADDITIONAL

OPERATING TEMPERATURE:
-20°C (-4°F), 40°C (104°F)

Always consult a qualified electrician before installing any lighting product.

MAXIM LIGHTING

WESTERN DISTRIBUTION CENTER (HEADQUARTER)
253 NORTH VINELAND AVE I CITY OF INDUSTRY, CA 91746

EASTERN DISTRIBUTION CENTER
101 GARDNER PARK | PEACHTREE CITY, GA 30269

P. 626.956.4200 I F. 626.956.4225 I maximlighting.com