

PRODUCT DESCRIPTION

Simple lines create a transitional style that fits a wide variety of exterior home design. Available in both Platinum or Bronze finish, Frosted Seedy or Clear Ribbed glass, or fluorescent, incandescent or LED lamping.

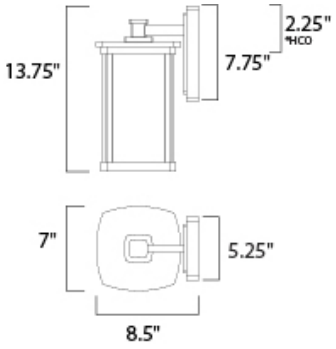

*height from center of outlet to top of the fixture

MEASUREMENTS

DIMENSION	: 7" W x 13.75" H x 8.5" Ext
BACK PLATE	: 5.25" W x 7.75" H x 2.25" HCO
HANGING WEIGHT	: 4.95 lb

LAMPING

INPUT VOLTAGE	: 120V
BULB	: 1 x 60W Incandescent E26 Medium , 60W Total
BULB INCLUDED	: (Not Included)
DIMMABLE	: Yes

FINISHES OPTION

Bronze (BZ)
Platinum (PL)

GLASS

Frosted Seedy FS

MATERIAL

Aluminum, Glass

RATINGS

cETLus
Wet Location

ADDITIONAL

OPERATING TEMPERATURE:
-20°C (-4°F), 40°C (104°F)

Always consult a qualified electrician before installing any lighting product.

MAXIM LIGHTING

WESTERN DISTRIBUTION CENTER (HEADQUARTER)
253 NORTH VINELAND AVE I CITY OF INDUSTRY, CA 91746

EASTERN DISTRIBUTION CENTER
101 GARDNER PARK | PEACHTREE CITY, GA 30269

P. 626.956.4200 I F. 626.956.4225 I maximlighting.com