Knob Hill DC | 3469CDSE

Job Name:_____ Job Type:_____ Quantity:_____ Comments:_____



PRODUCT DESCRIPTION

Knob Hill Cast is a traditional, European style collection from Maxim Lighting International in Sienna finish with Seedy glass.

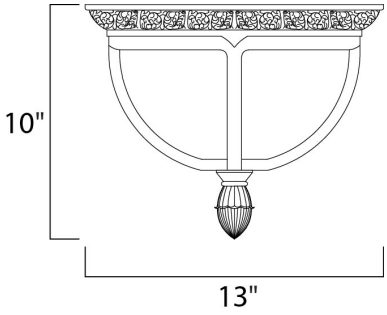

MEASUREMENTS

DIMENSION	: 13" L x 13" W x 10" H
HANGING WEIGHT	: 7.5 lb

LAMPING

INPUT VOLTAGE	: 120V
BULB	: 2 x 40W Incandescent E26 Medium , 80W Total
BULB INCLUDED	: (Not Included)
DIMMABLE	: Yes

FINISHES OPTION

Sienna (SE)

GLASS

Seedy CD

MATERIAL

Die Cast Aluminum

RATINGS

cETLus
Damp Location

ADDITIONAL

OPERATING TEMPERATURE:
-20°C (-4°F), 40°C (104°F)

Always consult a qualified electrician before installing any lighting product.

MAXIM LIGHTING

WESTERN DISTRIBUTION CENTER (HEADQUARTER)
253 NORTH VINELAND AVE I CITY OF INDUSTRY, CA 91746

EASTERN DISTRIBUTION CENTER
101 GARDNER PARK | PEACHTREE CITY, GA 30269

P. 626.956.4200 I F. 626.956.4225 I maximlighting.com