Wharf | 35003EB

Job Name:_____ Job Type:_____ Quantity:_____ Comments:_____



PRODUCT DESCRIPTION

Wharf is a transitional style collection from Maxim Lighting International, available in multiple finishes.

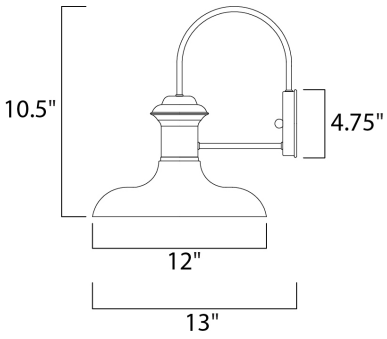

MEASUREMENTS

DIMENSION	: 12" W x 10.5" H x 13" Ext
BACK PLATE	: 4.75" W x 4.75" H x 8.5" HCO
HANGING WEIGHT	: 1.32 lb

LAMPING

INPUT VOLTAGE	: 120V
BULB	: 1 x 60W Incandescent E26 Medium , 60W Total
BULB INCLUDED	: (Not Included)
DIMMABLE	:

FINISHES OPTION

Empire Bronze (EB)

MATERIAL

Aluminum

RATINGS

cETLus
Wet Location

ADDITIONAL

OPERATING TEMPERATURE:
-20°C (-4°F), 40°C (104°F)

Always consult a qualified electrician before installing any lighting product.

MAXIM LIGHTING®

WESTERN DISTRIBUTION CENTER (HEADQUARTER)
253 NORTH VINELAND AVE I CITY OF INDUSTRY, CA 91746

EASTERN DISTRIBUTION CENTER
101 GARDNER PARK | PEACHTREE CITY, GA 30269

P. 626.956.4200 I F. 626.956.4225 I maximlighting.com