Merge | 39516CLBKWE

Job Name:_____ Job Type:_____ Quantity:_____ Comments:_____







PRODUCT DESCRIPTION

A modern classic created using mixed medium in complimentary finishes that come together to compose a beautiful art form. Available in your choice of Wenge wood with Black and Polished Nickel accents or Antique Pecan wood with Bronze and Satin Brass. Tall Clear glass cylinders with a frosted band complement the scale of the design.

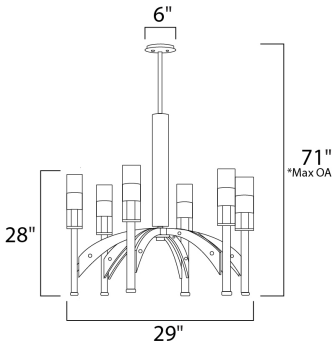

*max overall height

MEASUREMENTS

DIMENSION	: 29" L x 29" W x 28" H
MAX OAH	: 71" OAH
CANOPY	: 6" W x 0.75" H x 6" L
HANGING WEIGHT	: 24.64 lb
WIRE LENGTH	: 120"

LAMPING

INPUT VOLTAGE	: 120V
LUMENS	: 2,940 Rated
BULB	: 6 x 40W Xenon G9 , 240W Total
BULB INCLUDED	: (Included)
DIMMABLE	: Y

FINISHES OPTION

Black / Wenge (BKWE)

GLASS

Clear CL

MATERIAL

Steel, Wood, Glass

RATINGS

cETLus
Dry Location

ADDITIONAL

ADJUSTABLE
RATED LIFE 2000 Hours
OPERATING TEMPERATURE:
-20°C (-4°F), 40°C (104°F)

Always consult a qualified electrician before installing any lighting product.

MAXIM LIGHTING

WESTERN DISTRIBUTION CENTER (HEADQUARTER)
253 NORTH VINELAND AVE I CITY OF INDUSTRY, CA 91746

EASTERN DISTRIBUTION CENTER
101 GARDNER PARK | PEACHTREE CITY, GA 30269

P. 626.956.4200 I F. 626.956.4225 I maximlighting.com