Morrow Bay VX | 40285WGET

Job Name:_____ Job Type:_____ Quantity:_____ Comments:_____



PRODUCT DESCRIPTION

Maxim Lighting's Morrow Bay VX Collection is made with Vivex, a material twice the strength of resin, is non-corrosive, UV resistant and backed with a 5-Year Limited Warranty. Morrow Bay VX features our Earth Tone finish and Water Glass.

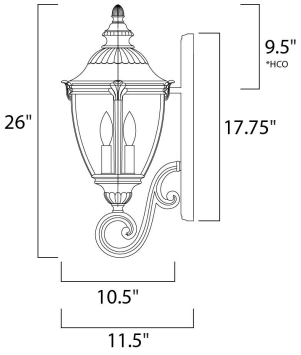

*height from center of outlet to the top of the fixture

MEASUREMENTS

DIMENSION	: 10.5" W x 26" H x 11.5" Ext
BACK PLATE	: 5.75" W x 17.75" H x 9.5" HCO
HANGING WEIGHT	: 7.5 lb

LAMPING

INPUT VOLTAGE	: 120V
BULB	: 3 x 40W Incandescent E12 Candelabra , 120W Total
BULB INCLUDED	: (Not Included)
DIMMABLE	: Yes

FINISHES OPTION

Earth Tone (ET)

GLASS

Water Glass WG

MATERIAL

Vivex Resin Composite

RATINGS

cETLus
Wet Location

ADDITIONAL

OPERATING TEMPERATURE:
-20°C (-4°F), 40°C (104°F)

Always consult a qualified electrician before installing any lighting product.

MAXIM LIGHTING®

WESTERN DISTRIBUTION CENTER (HEADQUARTER)
253 NORTH VINELAND AVE I CITY OF INDUSTRY, CA 91746

EASTERN DISTRIBUTION CENTER
101 GARDNER PARK | PEACHTREE CITY, GA 30269

P. 626.956.4200 I F. 626.956.4225 I maximlighting.com