Lightray LED | 86108AL

Job Name:_____ Job Type:_____ Quantity:_____ Comments:_____



PRODUCT DESCRIPTION

Indirect exterior lighting not only provides illumination where you want but it also highlights the building structure for a beautiful architectural effect. Our collection of up and down lighting fixtures are available in both Architectural Bronze, Black, and Brushed Aluminum.

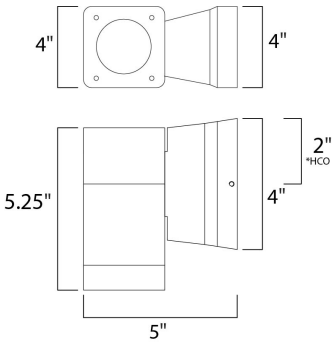

*height from center of outlet to the top of the fixture

MEASUREMENTS

DIMENSION	: 4" W x 5.25" H x 5" Ext
BACK PLATE	: 4" W x 4" H x 2" HCO
HANGING WEIGHT	: 1.83 lb

LAMPING

INPUT VOLTAGE	: 120V
LUMENS	: 315 Rated (161 Del.)
BULB	: 1 x 4.5W LED PCB Integrated , 4W Total
BULB INCLUDED	: (Integrated)
DIMMABLE	: Triac CL
CRI	: 80+ CRI
COLOR_TEMP	: 3000K
LIGHTING_DIRECTION	: Down

FINISHES OPTION

Architectural Bronze (ABZ)
Brushed Aluminum (AL)

MATERIAL

Aluminum

RATINGS

cETLus
Wet Location
DARKSKY

ADDITIONAL

INSTALL UP/DOWN: Down
OPERATING TEMPERATURE:
-20°C (-4°F), 40°C (104°F)

PHOTOMETIC: Report Found Online

Always consult a qualified electrician before installing any lighting product.

MAXIM LIGHTING

WESTERN DISTRIBUTION CENTER (HEADQUARTER)
253 NORTH VINELAND AVE I CITY OF INDUSTRY, CA 91746

EASTERN DISTRIBUTION CENTER
101 GARDNER PARK | PEACHTREE CITY, GA 30269

P. 626.956.4200 I F. 626.956.4225 I maximlighting.com