CounterMax MX-L-120-SL | 88900WT

Job Name:_____ Job Type:_____ Quantity:_____ Comments:_____

PRODUCT DESCRIPTION

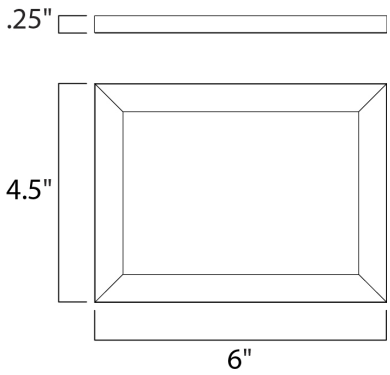

MEASUREMENTS

DIMENSION	: 6" L x 4.5" W x 0.25" H
MAX OAH	: 0.25" OAH x 1.9" W
HANGING WEIGHT	: 0.33 lb

LAMPING

INPUT VOLTAGE	: 24V
LUMENS	: 210 Rated (180 Del.)
BULB	: 1 x 3W LED PCB Integrated , 3W Total
BULB INCLUDED	: (Integrated)
DIMMABLE	: Triac CL
CRI	: 90+ CRI
COLOR_TEMP	: 3000K

FINISHES OPTION

Bronze (BZ)

White (WT)

MATERIAL

Aluminum

RATINGS

cETLus
Dry Location

ADDITIONAL

RATED LIFE 40000 Hours
OPERATING TEMPERATURE:
-20°C (-4°F), 40°C (104°F)

PHOTOMETIC: Report Found Online

Always consult a qualified electrician before installing any lighting product.

MAXIM LIGHTING

WESTERN DISTRIBUTION CENTER (HEADQUARTER)
253 NORTH VINELAND AVE I CITY OF INDUSTRY, CA 91746

EASTERN DISTRIBUTION CENTER
101 GARDNER PARK | PEACHTREE CITY, GA 30269

P. 626.956.4200 I F. 626.956.4225 I maximlighting.com