# CounterMax MX-L-120-SL | 88900WT

Job Name:_____ Job Type:_____ Quantity:_____ Comments:_____

## PRODUCT DESCRIPTION

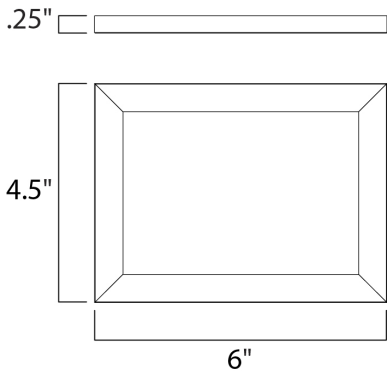


**MEASUREMENTS**

| | |
|---|---|
| DIMENSION | : 6" L x 4.5" W x 0.25" H |
| MAX OAH | : 0.25" OAH x 1.9" W |
| HANGING WEIGHT | : 0.33 lb |

**LAMPING**

| | |
|---|---|
| INPUT VOLTAGE | : 24V |
| LUMENS | : 210 Rated (180 Del.) |
| BULB | : 1 x 3W LED PCB Integrated , 3W Total |
| BULB INCLUDED | : (Integrated) |
| DIMMABLE | : Triac CL |
| CRI | : 90+ CRI |
| COLOR_TEMP | : 3000K |

## FINISHES OPTION

Bronze (BZ)

White (WT)

**MATERIAL**

Aluminum

**RATINGS**

cETLus
Dry Location

**ADDITIONAL**

RATED LIFE 40000 Hours
OPERATING TEMPERATURE:
-20°C (-4°F), 40°C (104°F)

PHOTOMETIC: Report Found Online

Always consult a qualified electrician before installing any lighting product.


MAXIM LIGHTING

WESTERN DISTRIBUTION CENTER (HEADQUARTER)
253 NORTH VINELAND AVE I CITY OF INDUSTRY, CA 91746

EASTERN DISTRIBUTION CENTER
101 GARDNER PARK | PEACHTREE CITY, GA 30269

P. 626.956.4200 I F. 626.956.4225 I maximlighting.com