Job Name:_____ Job Type:_____ Quantity:_____ Comments:_____



PRODUCT DESCRIPTION

Maxim Lighting's commitment to both the residential lighting and the home building industries will assure you a product line focused on your lighting needs. With Maxim Lighting you will find quality product that is well designed, well priced and readily available.

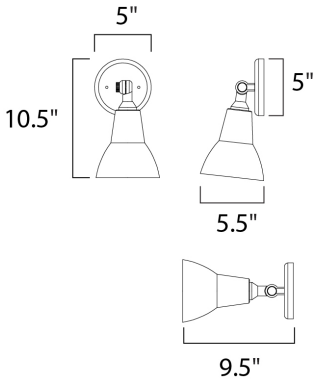

MEASUREMENTS

DIMENSION	: 5.5" W x 10.5" H x 9.5" Ext
BACK PLATE	: 5" W x 5" H x 3" HCO
HANGING WEIGHT	: 1.2 lb

LAMPING

INPUT VOLTAGE	: 120V
BULB	: 1 x 75W Incandescent E26 Medium , 75W Total
BULB INCLUDED	: (Not Included)
DIMMABLE	: Yes

FINISHES OPTION

- Black (BK)
- Tawny Bronze (TB)
- White (WT)

MATERIAL

Die Cast Aluminum

RATINGS

cETLus
Damp Location

ADDITIONAL

OPERATING TEMPERATURE:
-20°C (-4°F), 40°C (104°F)

Always consult a qualified electrician before installing any lighting product.

MAXIM LIGHTING®

WESTERN DISTRIBUTION CENTER (HEADQUARTER)
253 NORTH VINELAND AVE I CITY OF INDUSTRY, CA 91746

EASTERN DISTRIBUTION CENTER
101 GARDNER PARK | PEACHTREE CITY, GA 30269

P. 626.956.4200 I F. 626.956.4225 I maximlighting.com